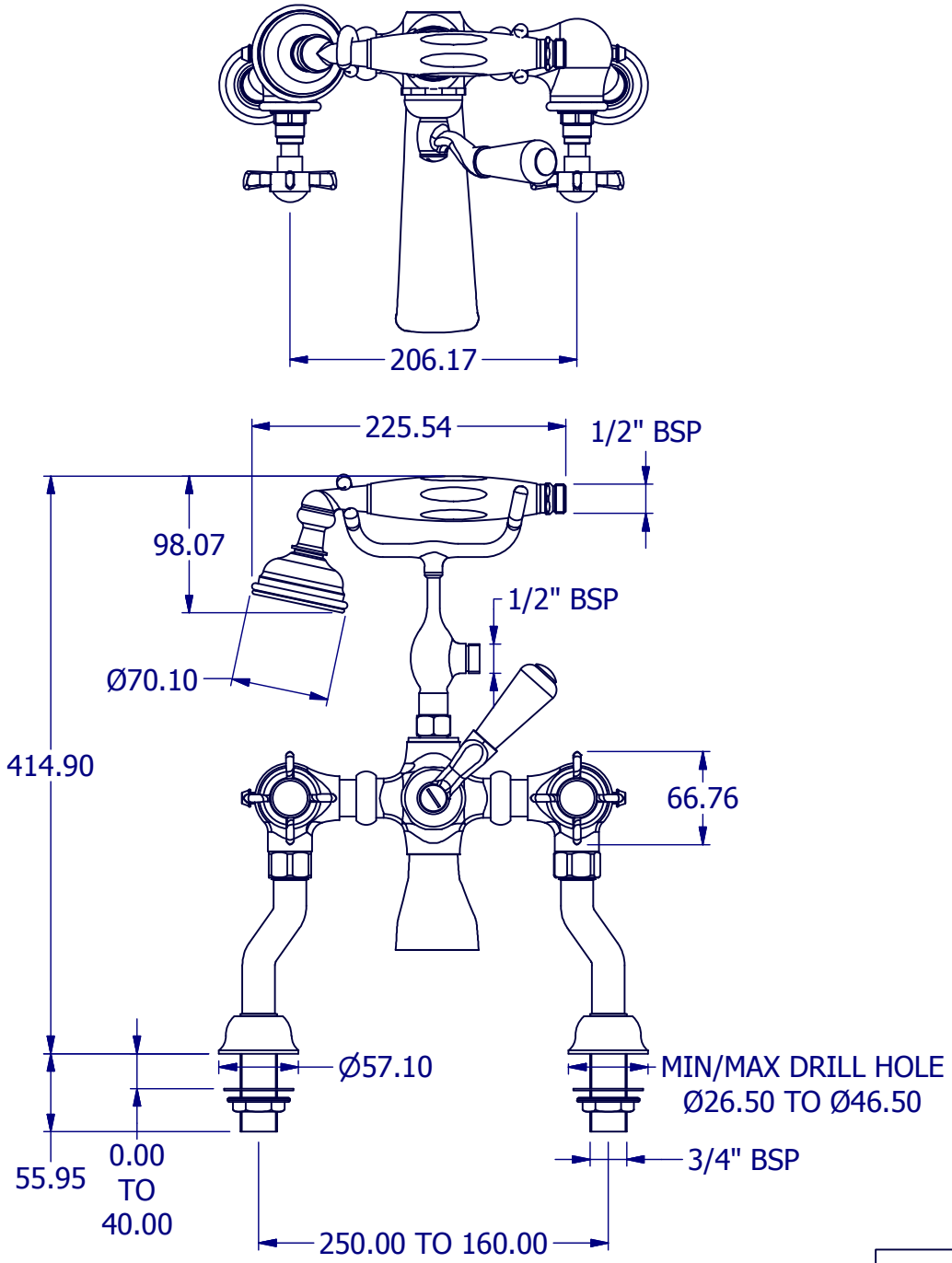

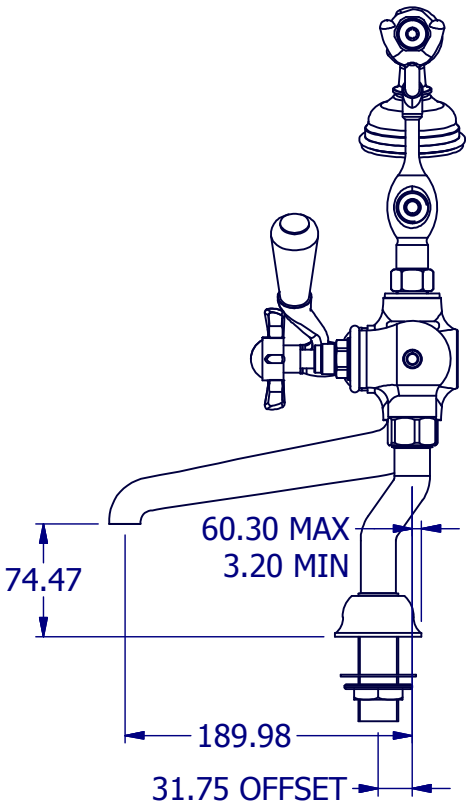

PROPERTY OF SAMUEL HEATH ©			DESIGNER		ANTONIO DUGGAL	
A4	DRG No	VAC36-DX	ISSUE NO.	A	ISSUE DATE	16/07/18