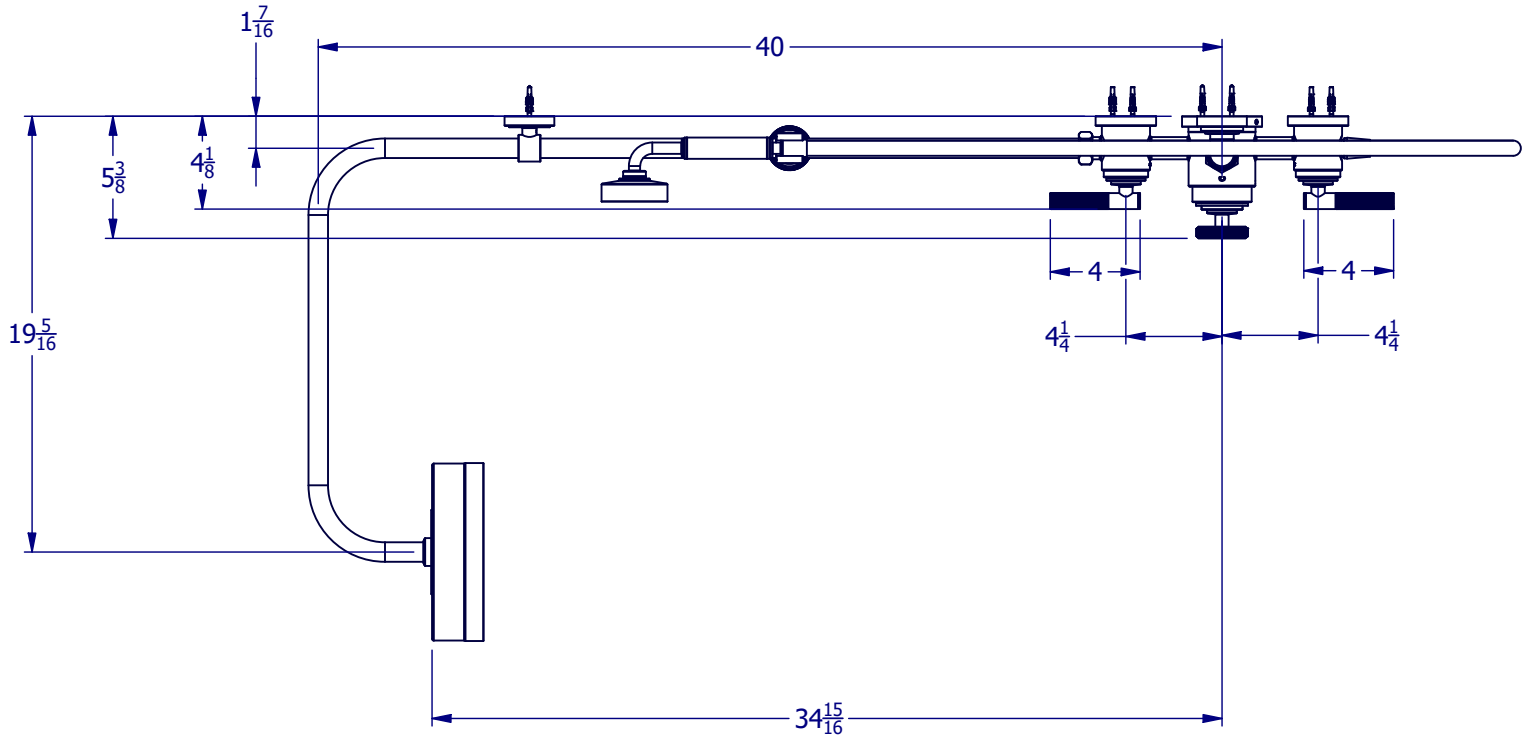

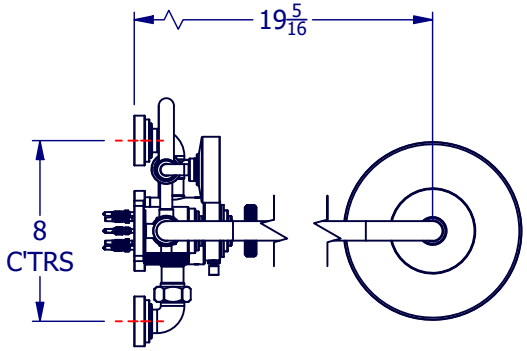

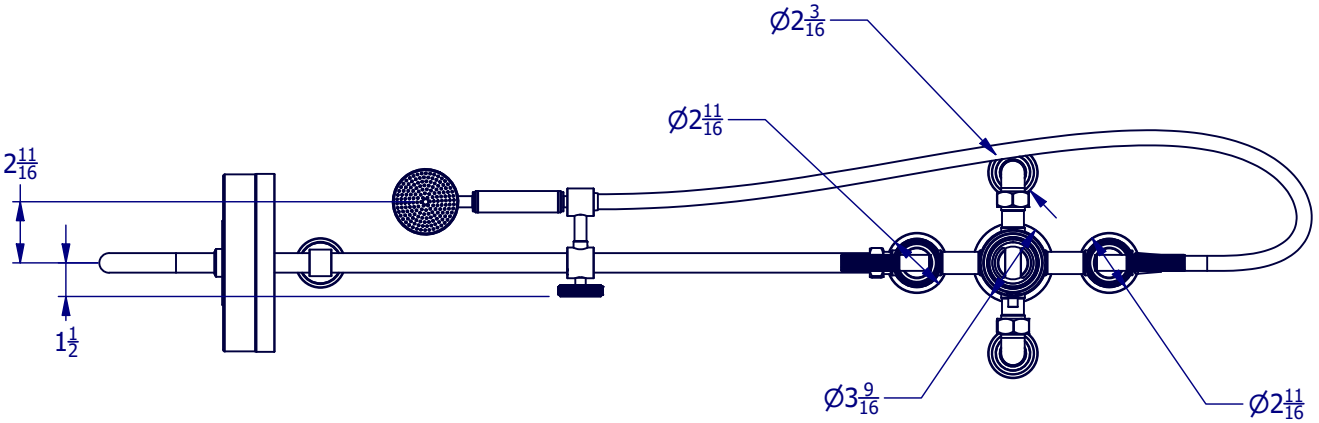

PROPERTY OF SAMUEL HEATH ©			DESIGNER		R.CLARKE	
A4	DRG No	V7KA6WLL9	ISSUE NO.	A	ISSUE DATE	17/12/21