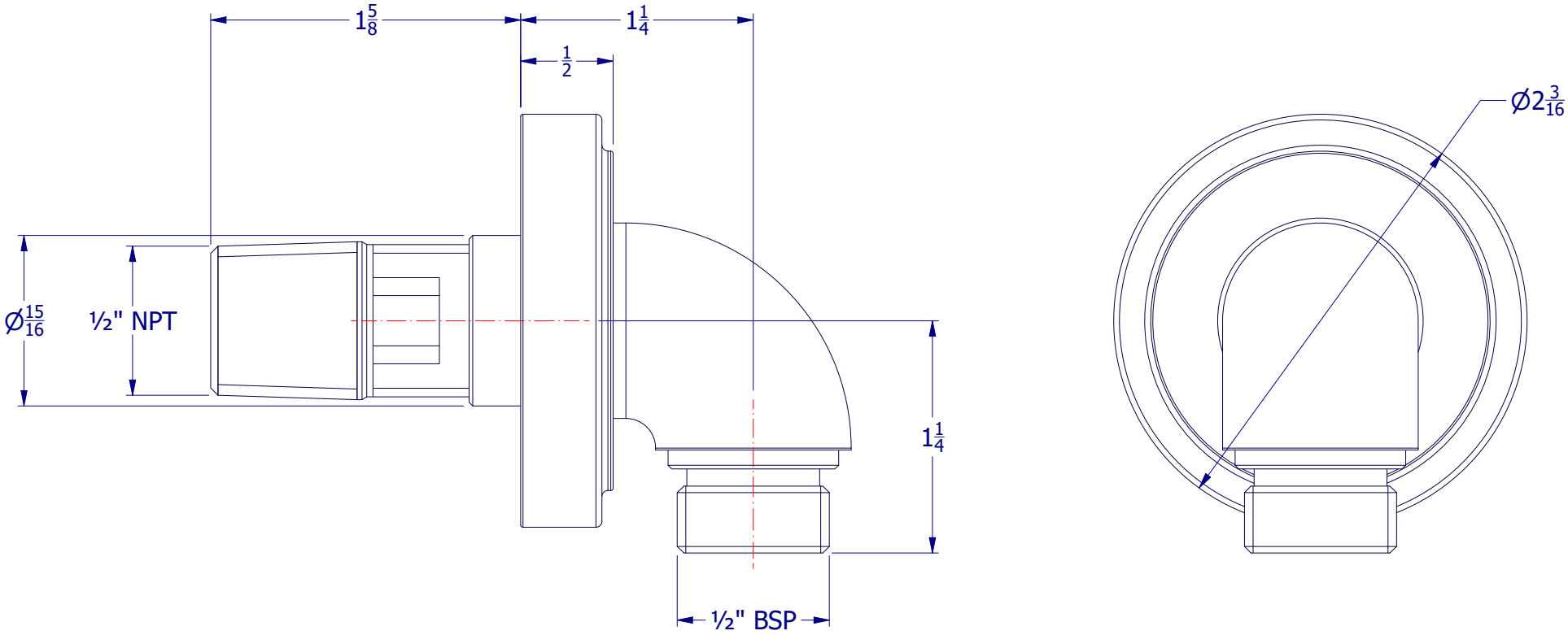


| | | | | | | |
|---|---|---|---|---|---|---|
| PROPERTY OF SAMUEL HEATH © | | | DESIGNER | | R.CLARKE | |
| A4 | DRG No | V7KA640 | ISSUE NO. | A | ISSUE DATE | 22/10/24 |