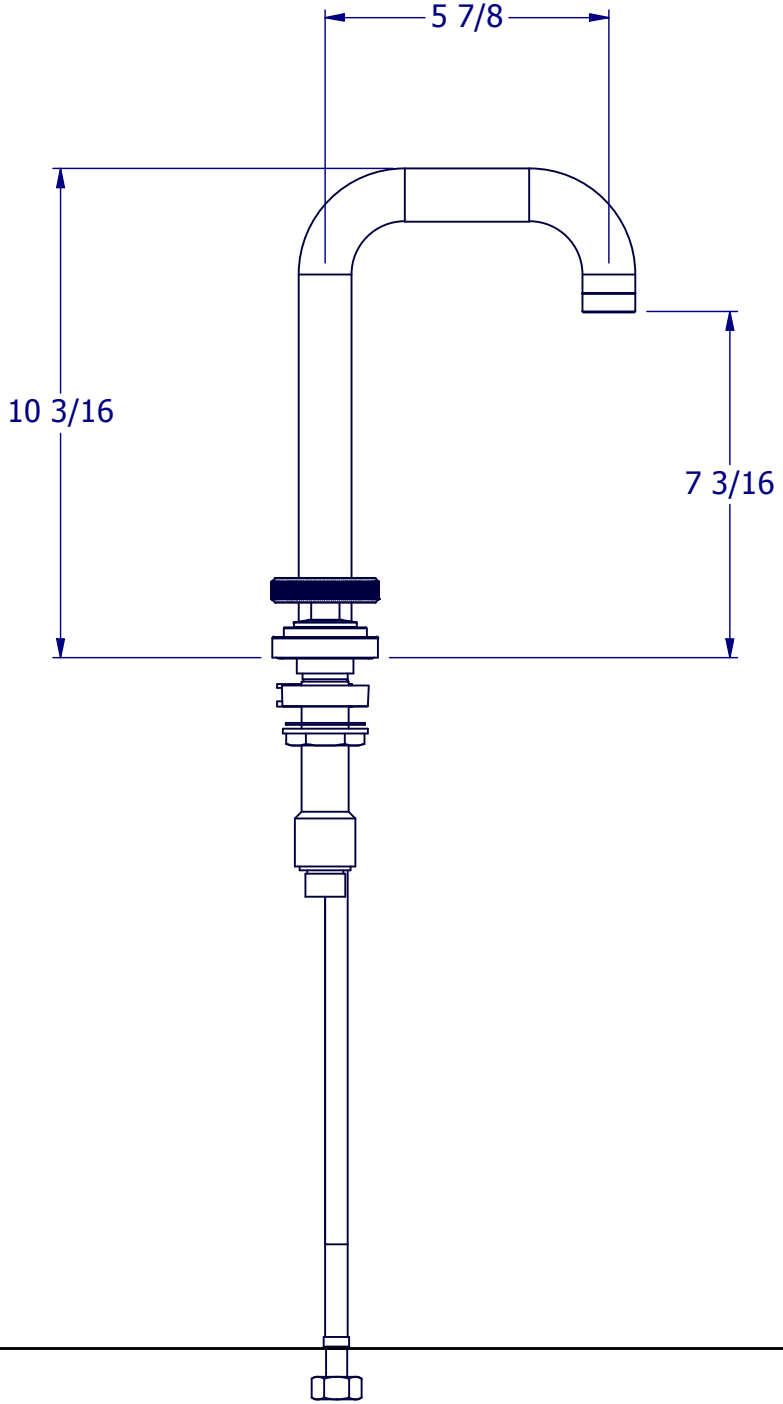

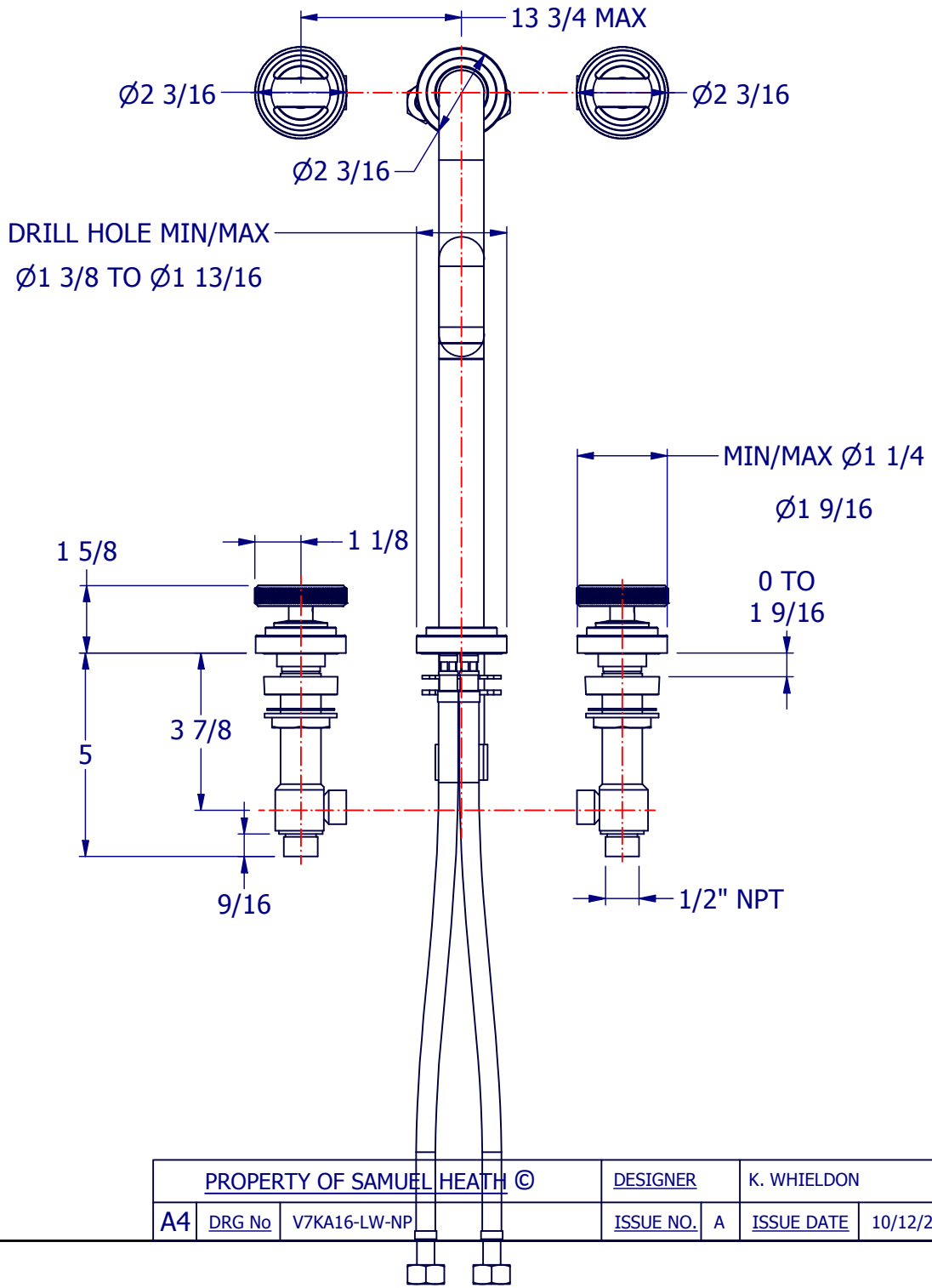

PROPERTY OF SAMUEL HEATH ©			DESIGNER		K. WHIELDON	
A4	DRG No	V7KA16-LW-NP	ISSUE NO.	A	ISSUE DATE	10/12/21