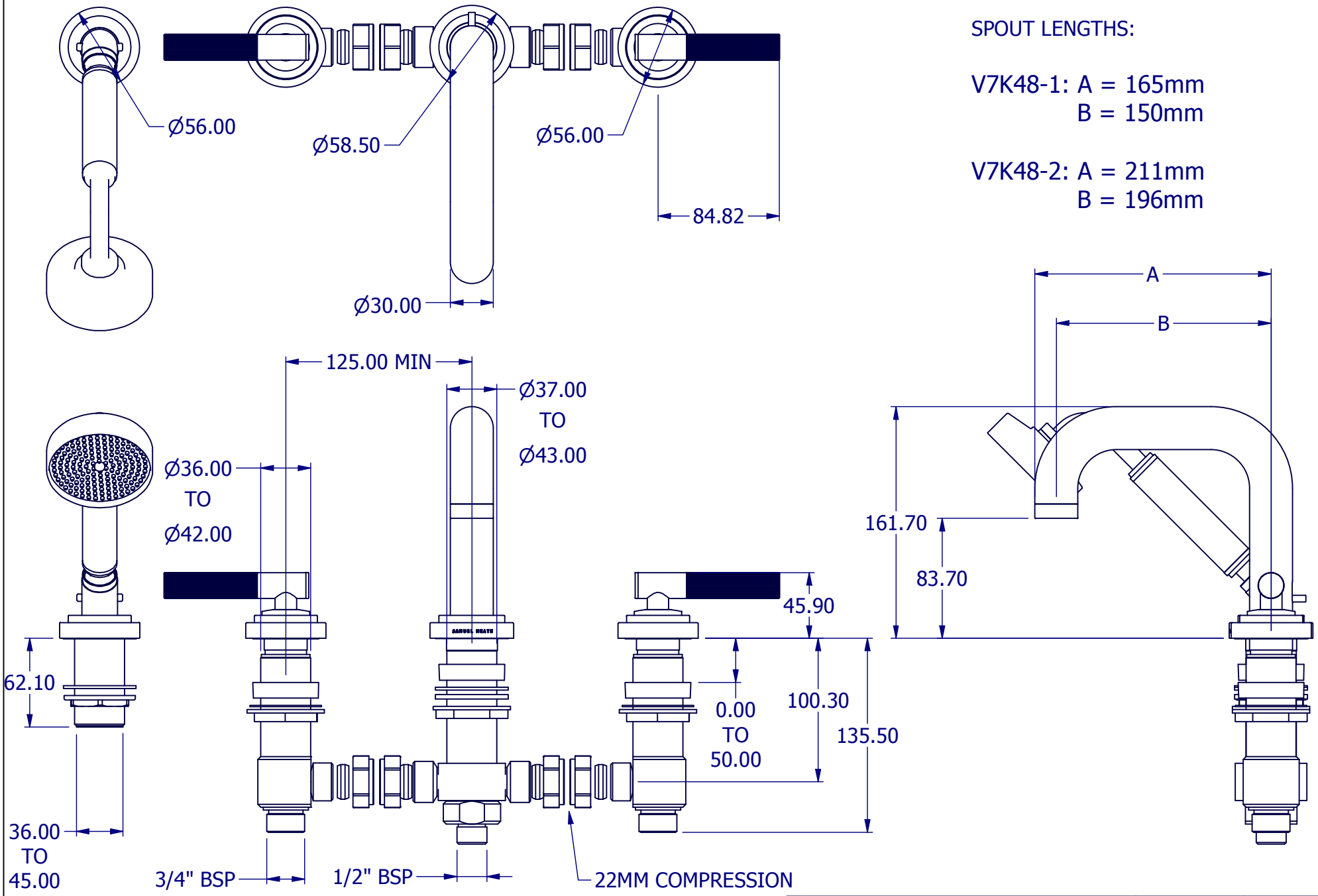

SPOUT LENGTHS:

V7K48-1: A = 165mm
B = 150mm

V7K48-2: A = 211mm
B = 196mm

PROPERTY OF SAMUEL HEATH ©			DESIGNER		K. WHIELDON	
A4	DRG No	V7K48-LL	ISSUE NO.	A	ISSUE DATE	19/10/21