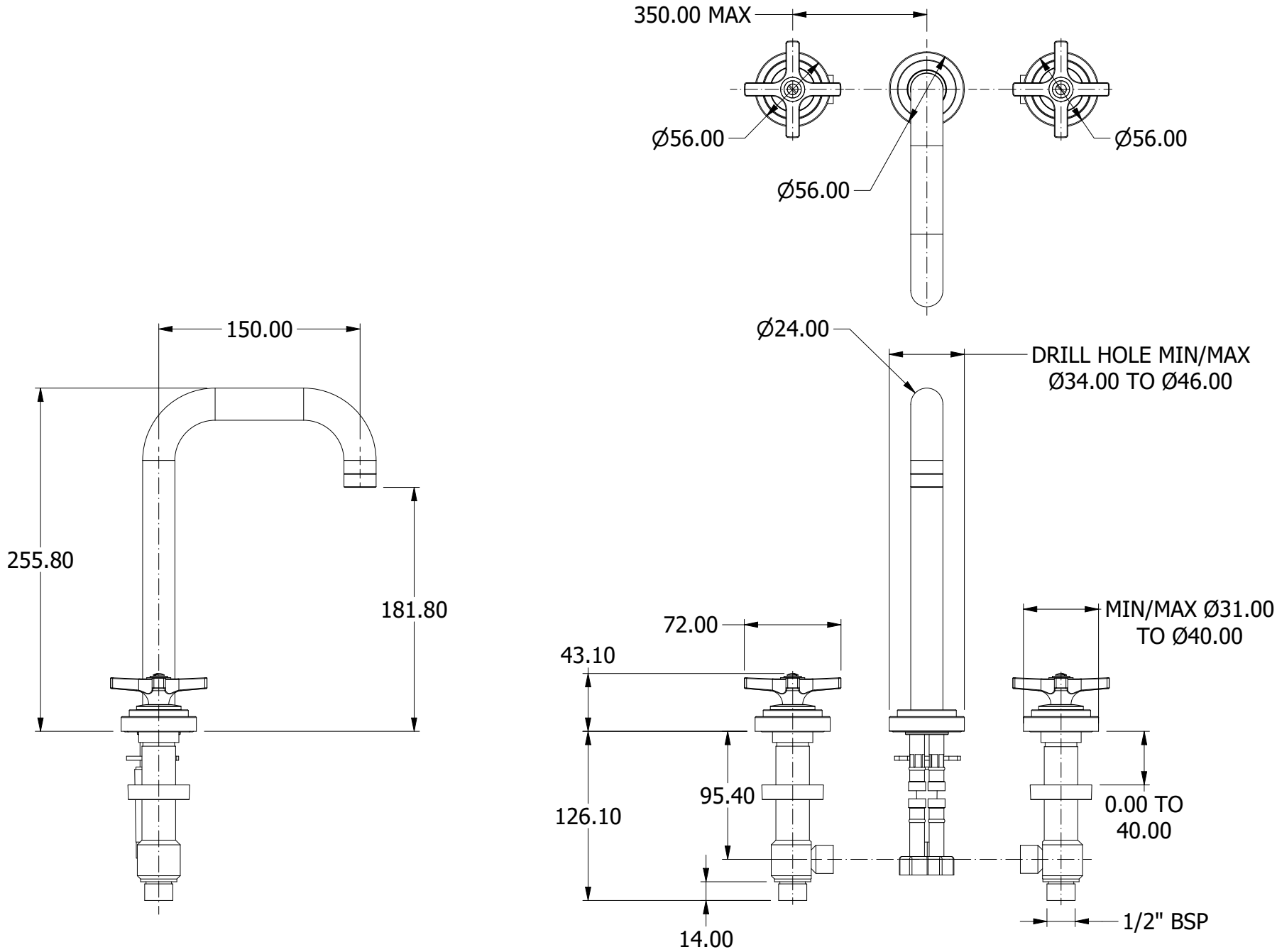

PROPERTY OF SAMUEL HEATH ©			DESIGNER		C.DANKS	
A4	DRG No	V7K16SXF	ISSUE NO.	A	ISSUE DATE	11.1.22