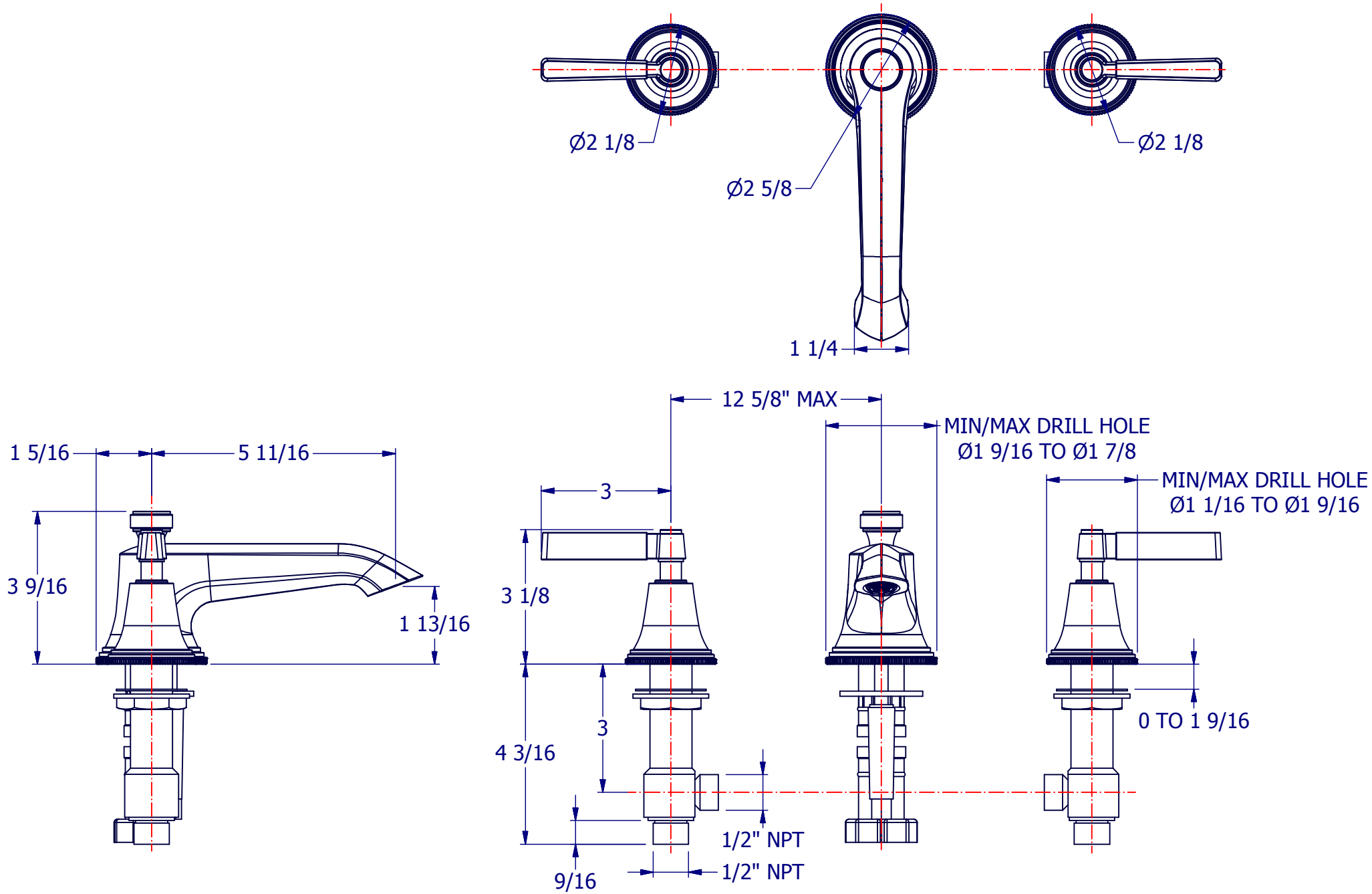


| PROPERTY OF SAMUEL HEATH © | | | DESIGNER | | ANTONIO DUGGAL | |
|---|---|---|---|---|---|---|
| A4 | DRG No | V6KA14-M-NP | ISSUE NO. | A | ISSUE DATE | 12/09/18 |