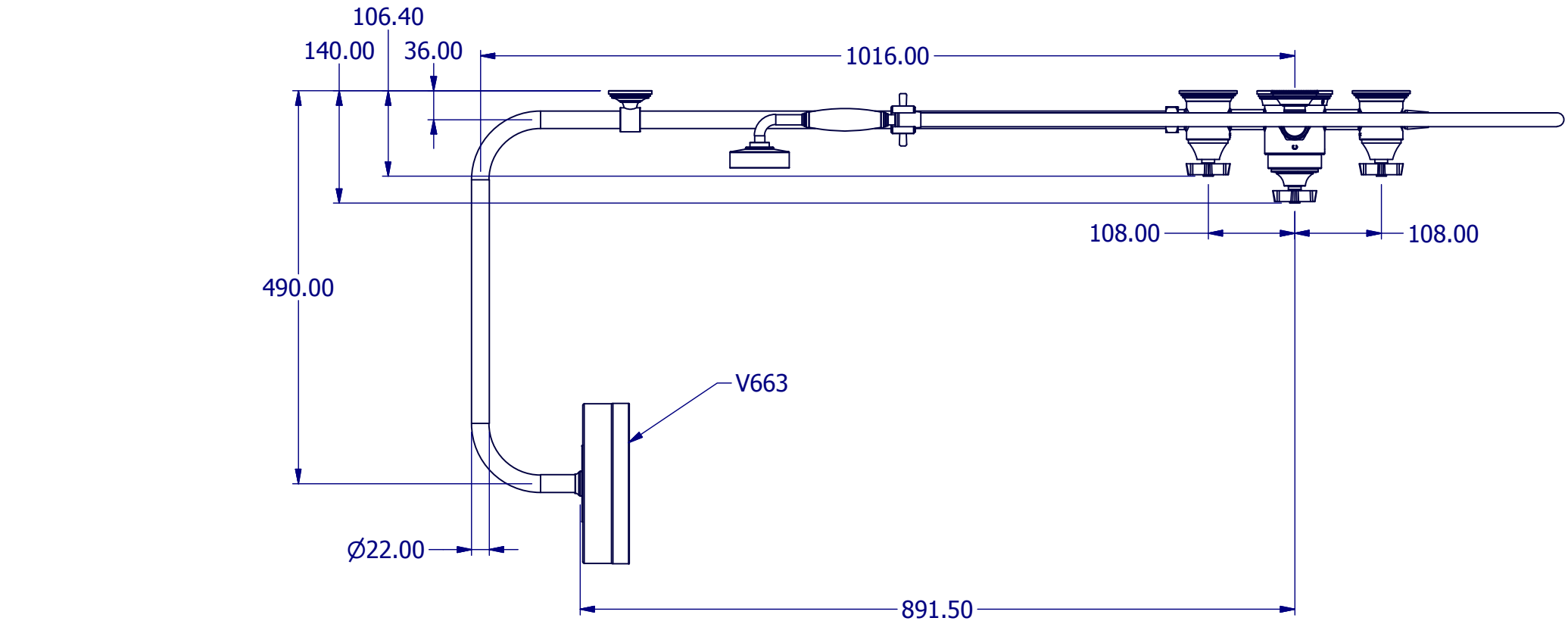


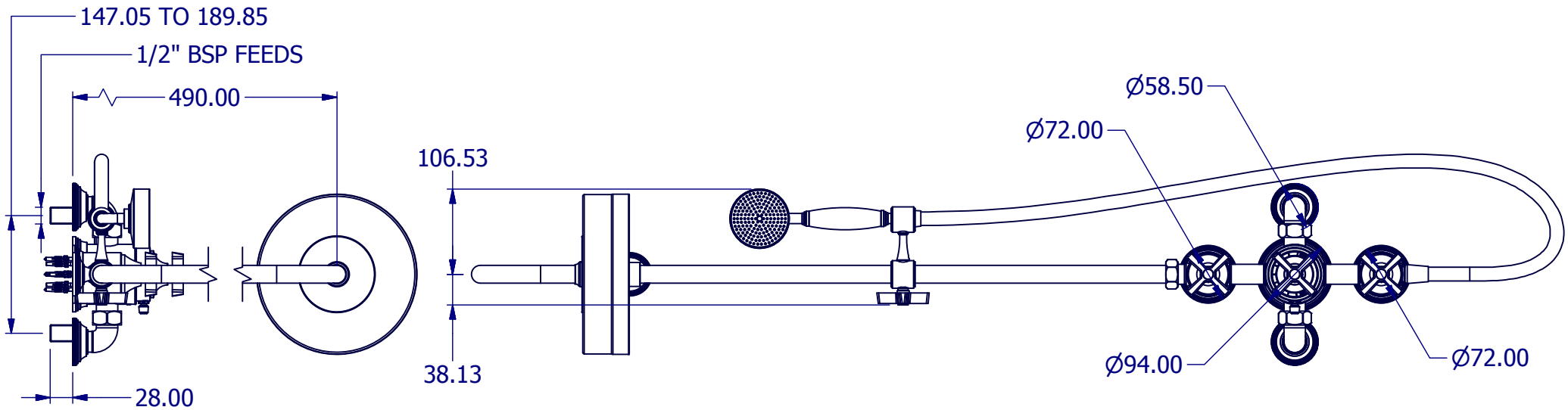


| A4 | DRG No | V6K6XX & V6K6XXB | ISSUE NO. | A | ISSUE DATE | 12/9/12 |
|---|---|---|---|---|---|---|