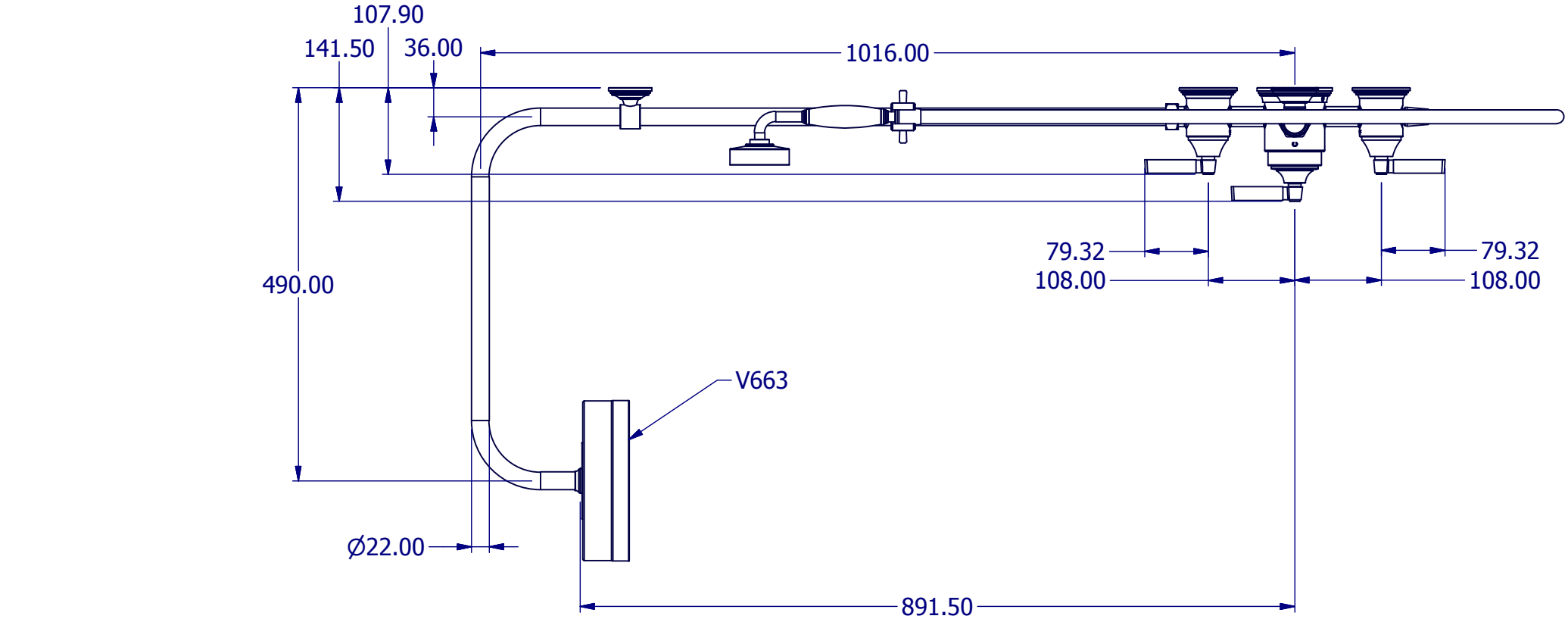

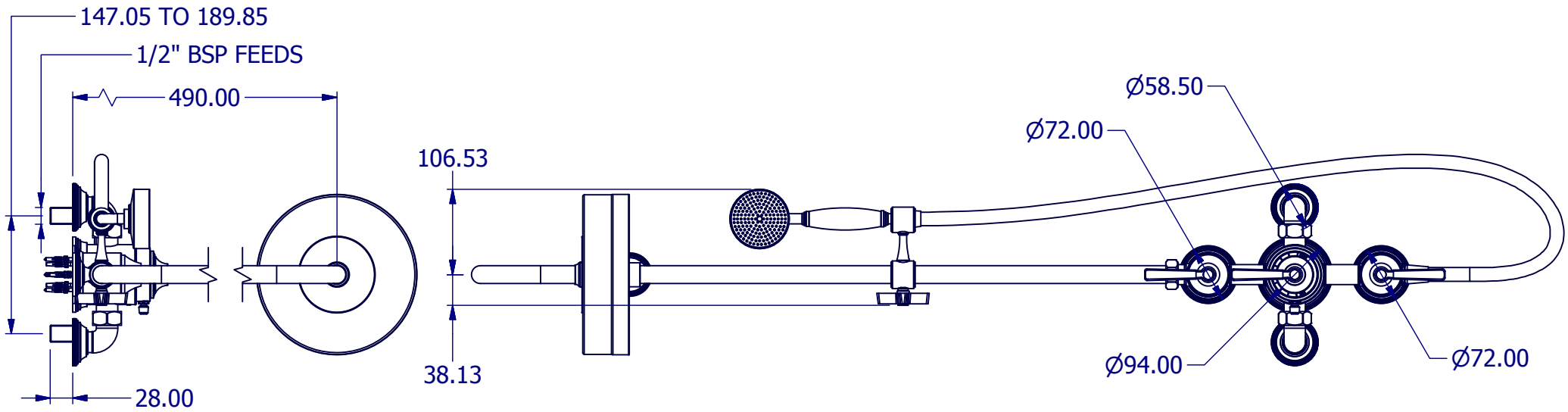

A4	DRG No	V6K6MM & V6K6MMB	ISSUE NO.	A	ISSUE DATE	12/9/12