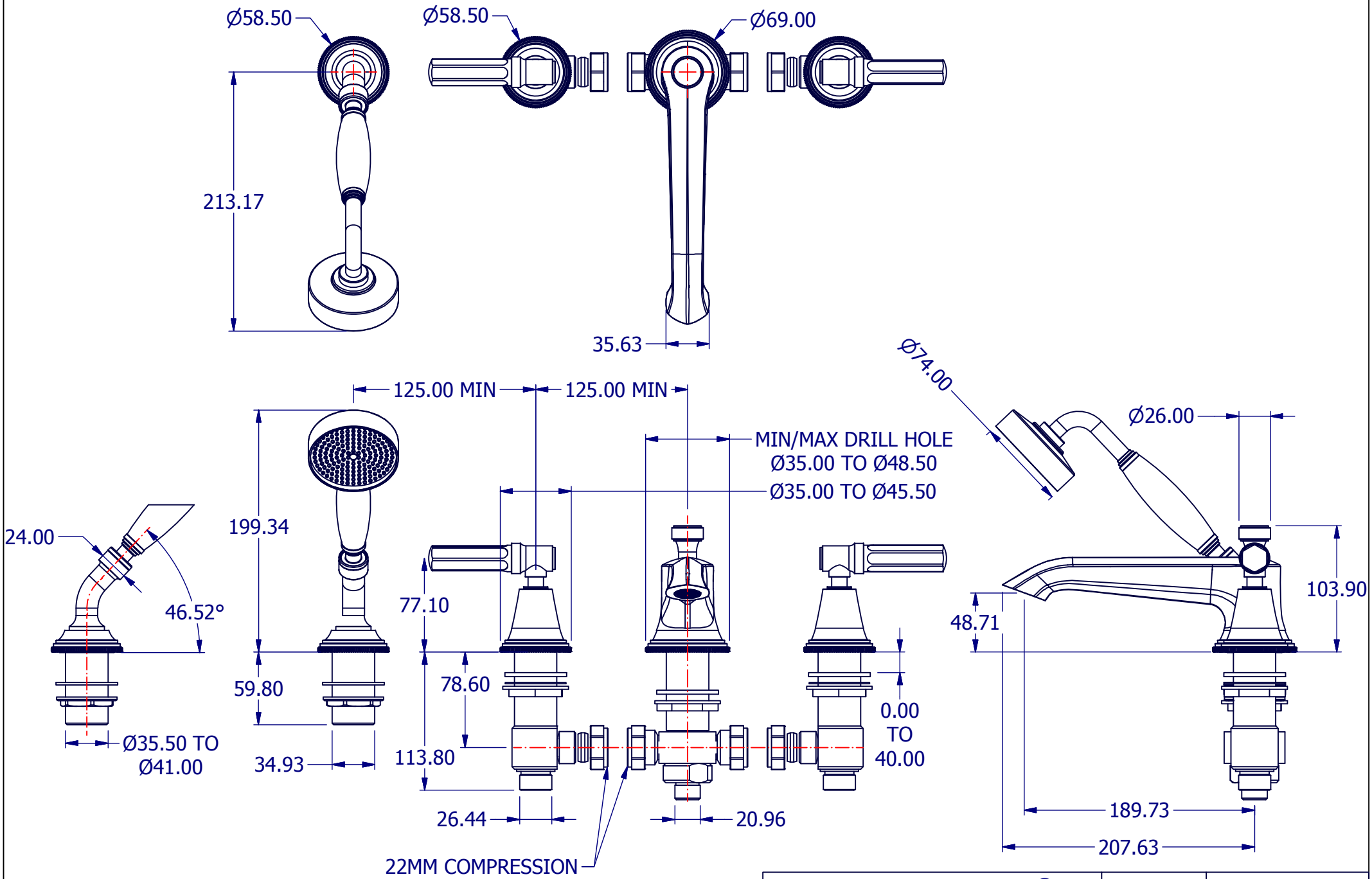

PROPERTY OF SAMUEL HEATH ©			DESIGNER		ANTONIO DUGGAL	
A4	DRG No	V6K49L	ISSUE NO.	A	ISSUE DATE	13/07/18