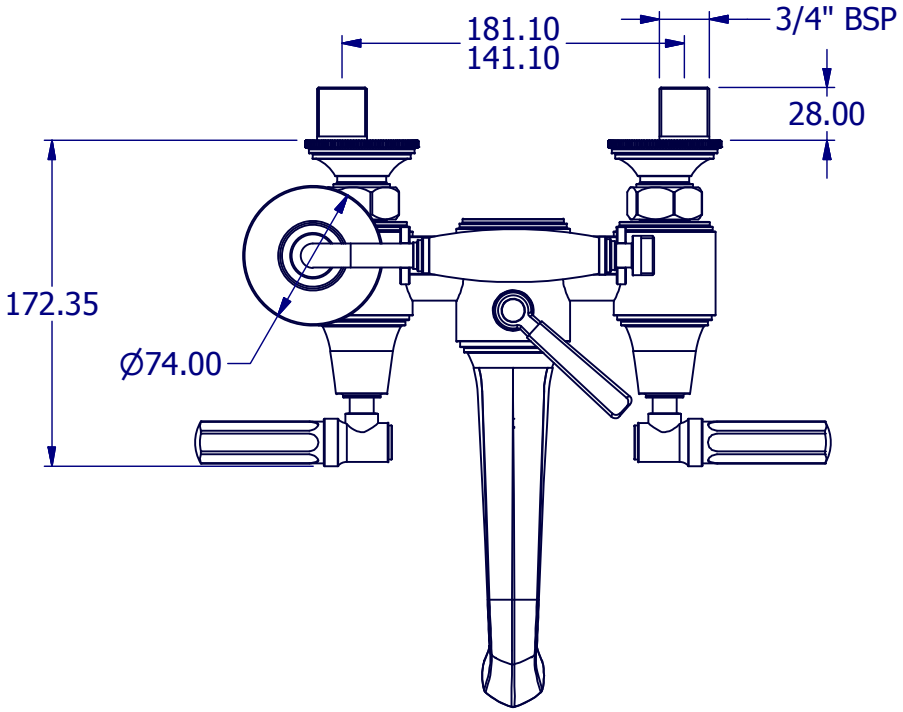

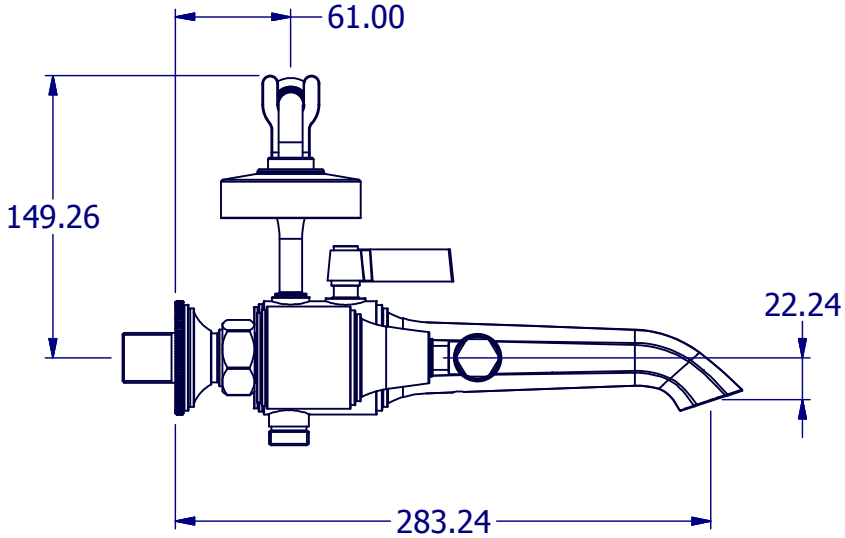

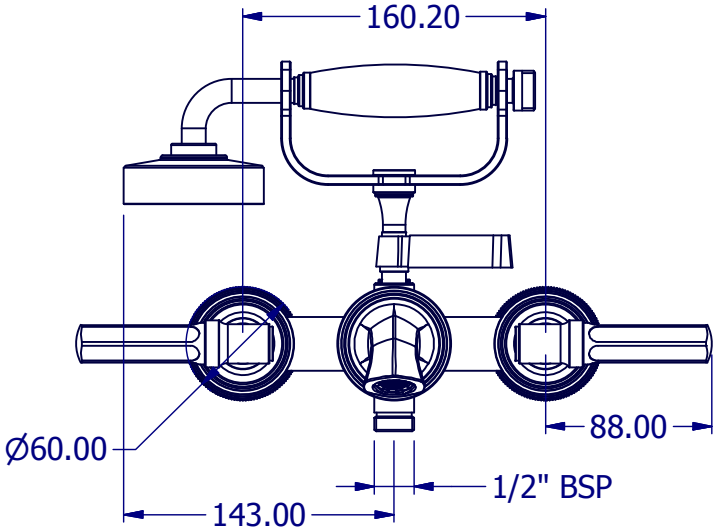

A4	DRG No	V6K32L	ISSUE NO.	A	ISSUE DATE	26/11/13