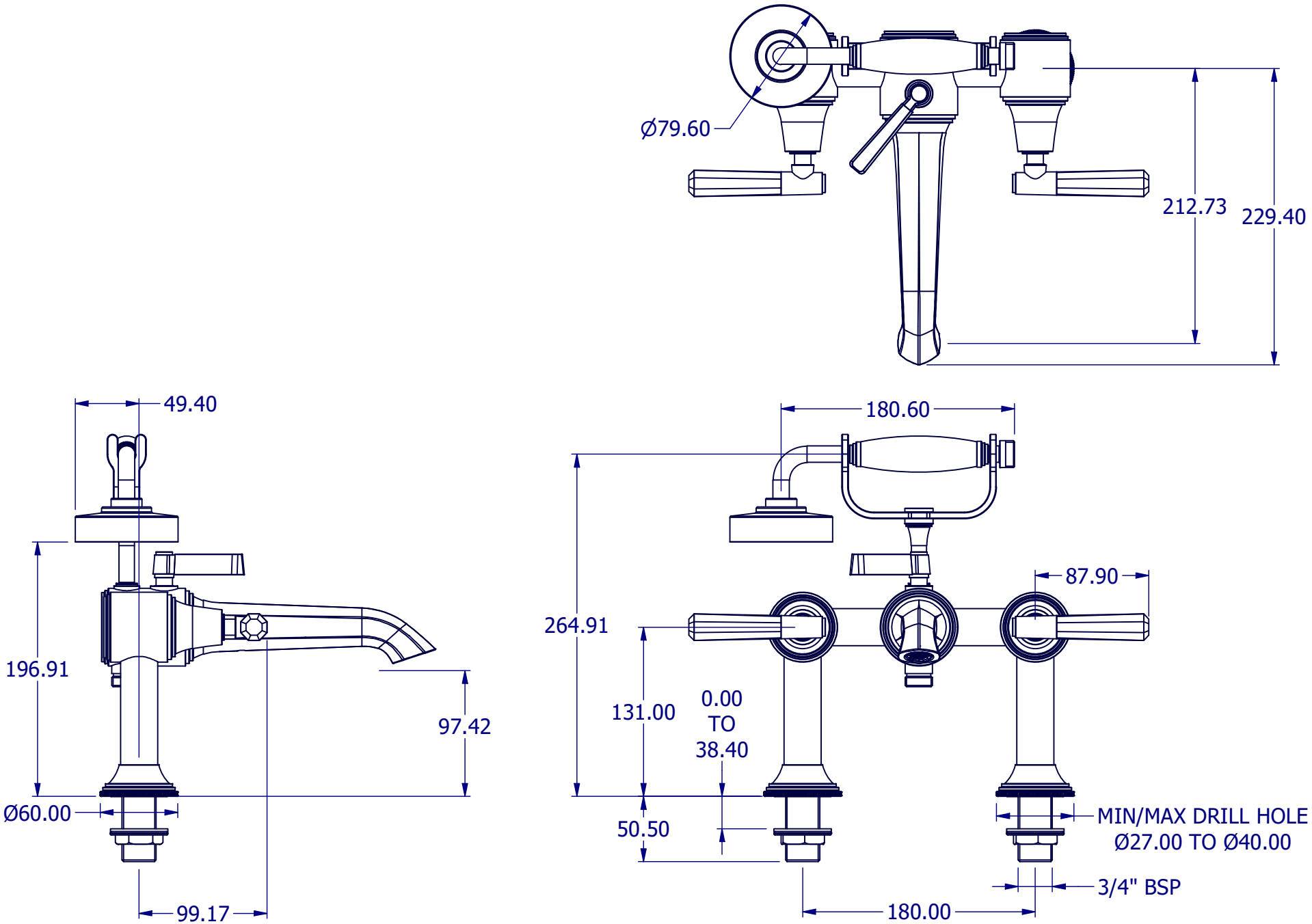

PROPERTY OF SAMUEL HEATH ©			DESIGNER		C.DANKS	
A4	DRG No	V6K30BCR CCR	ISSUE NO.	A	ISSUE DATE	3.6.21