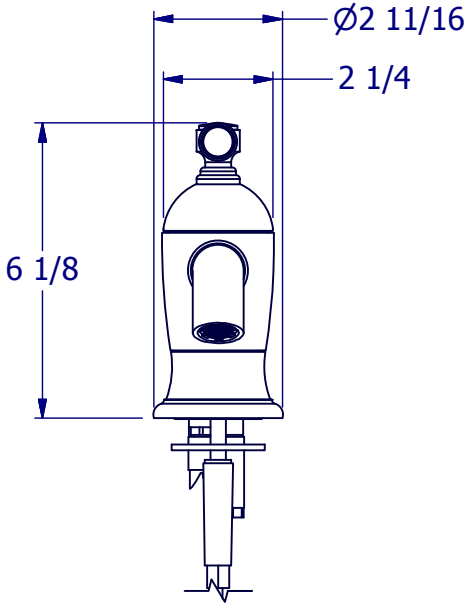

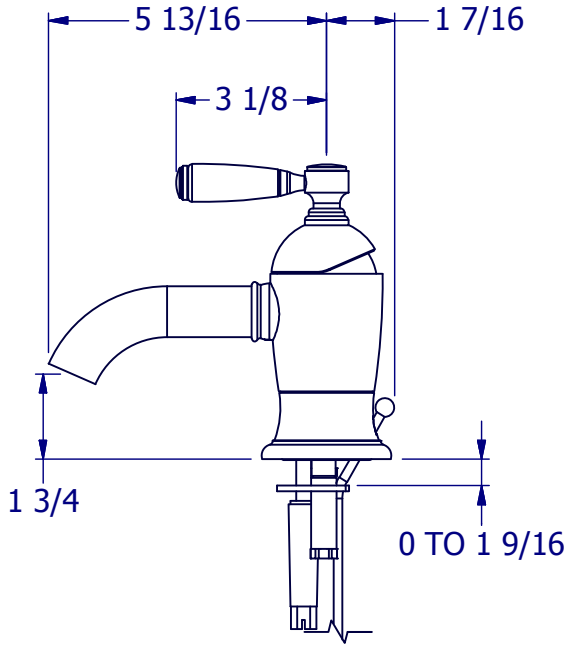

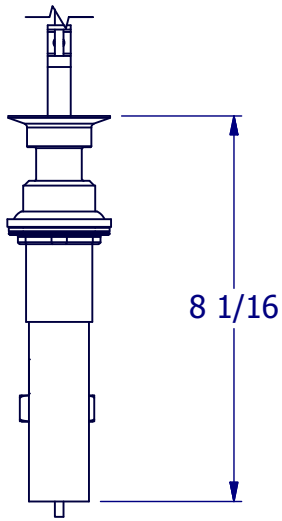

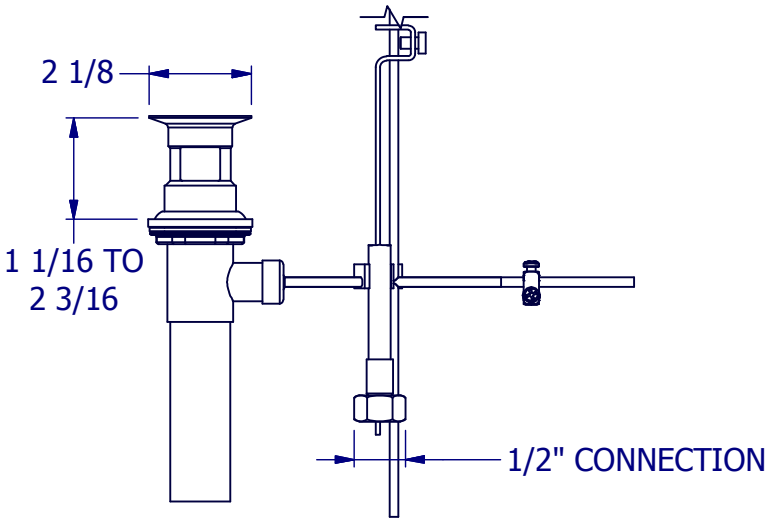

PROPERTY OF SAMUEL HEATH ©			DESIGNER		ANTONIO DUGGAL	
A4	DRG No	V2KALL09-C/M/W/GBC	ISSUE NO.	A	ISSUE DATE	09/03/18