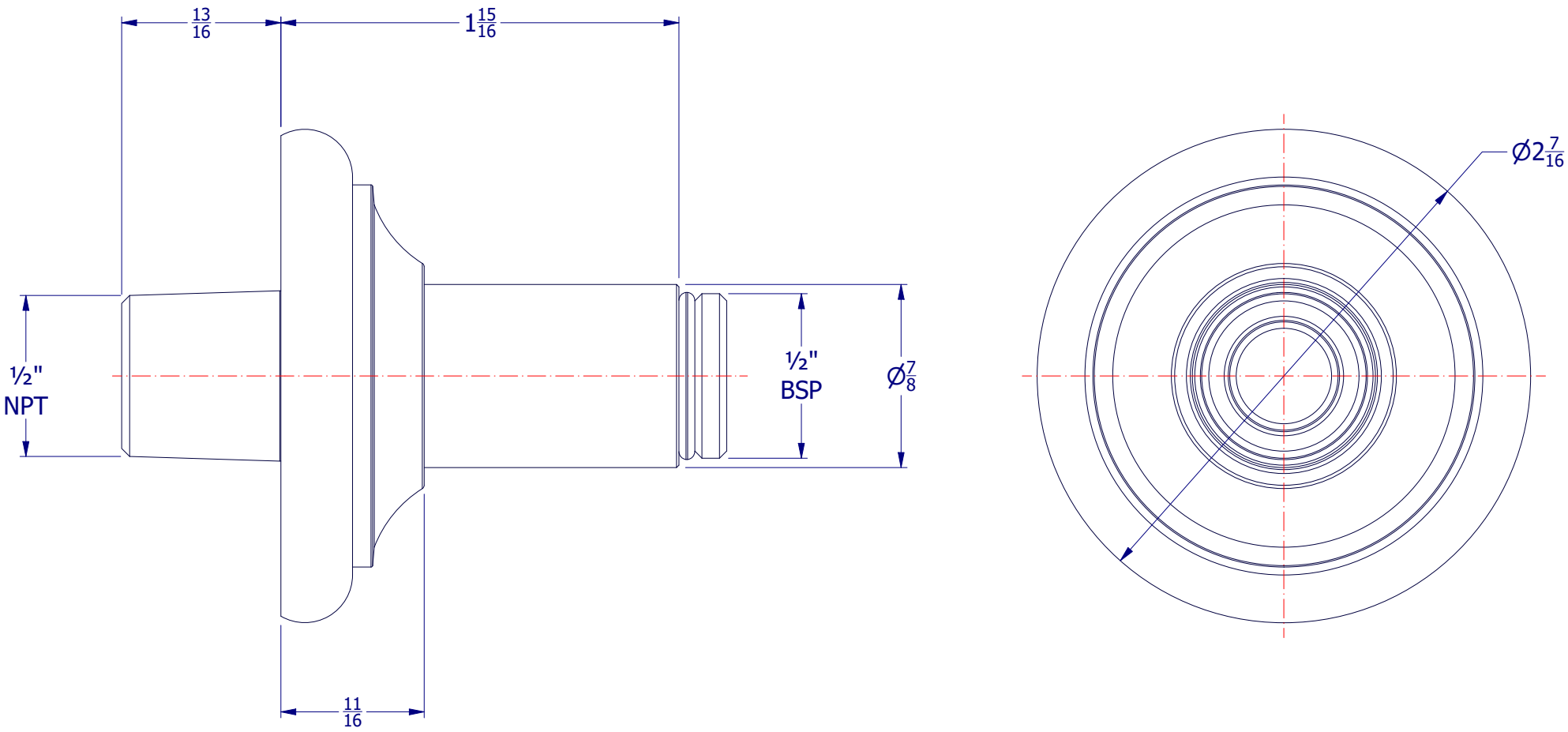

PROPERTY OF SAMUEL HEATH ©			DESIGNER		R.CLARKE	
A4	DRG No	V2KA690-A	ISSUE NO.	A	ISSUE DATE	24/07/24