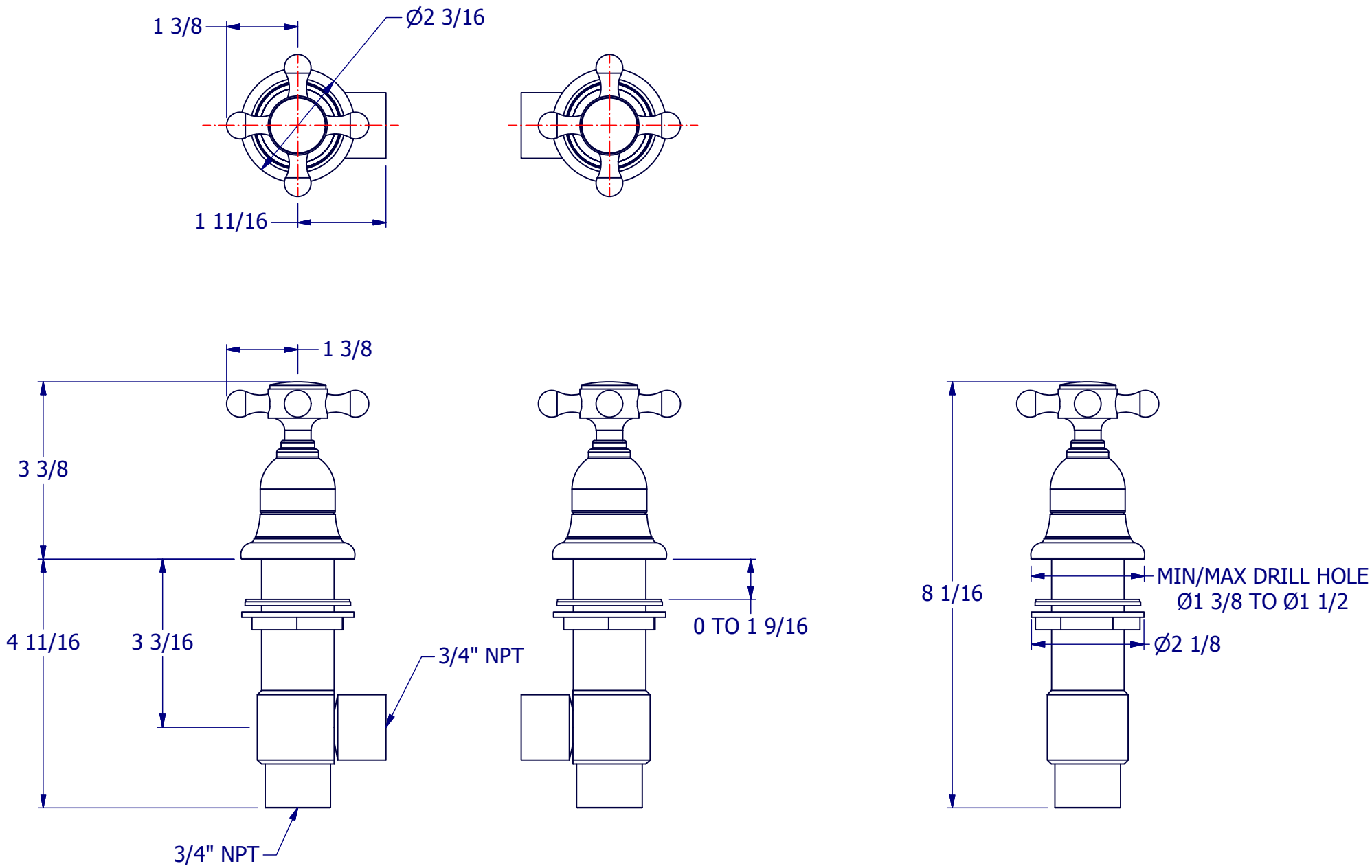

PROPERTY OF SAMUEL HEATH ©			DESIGNER		ANTONIO DUGGAL	
A4	DRG No	V2KA42-X	ISSUE NO.	A	ISSUE DATE	31/07/18