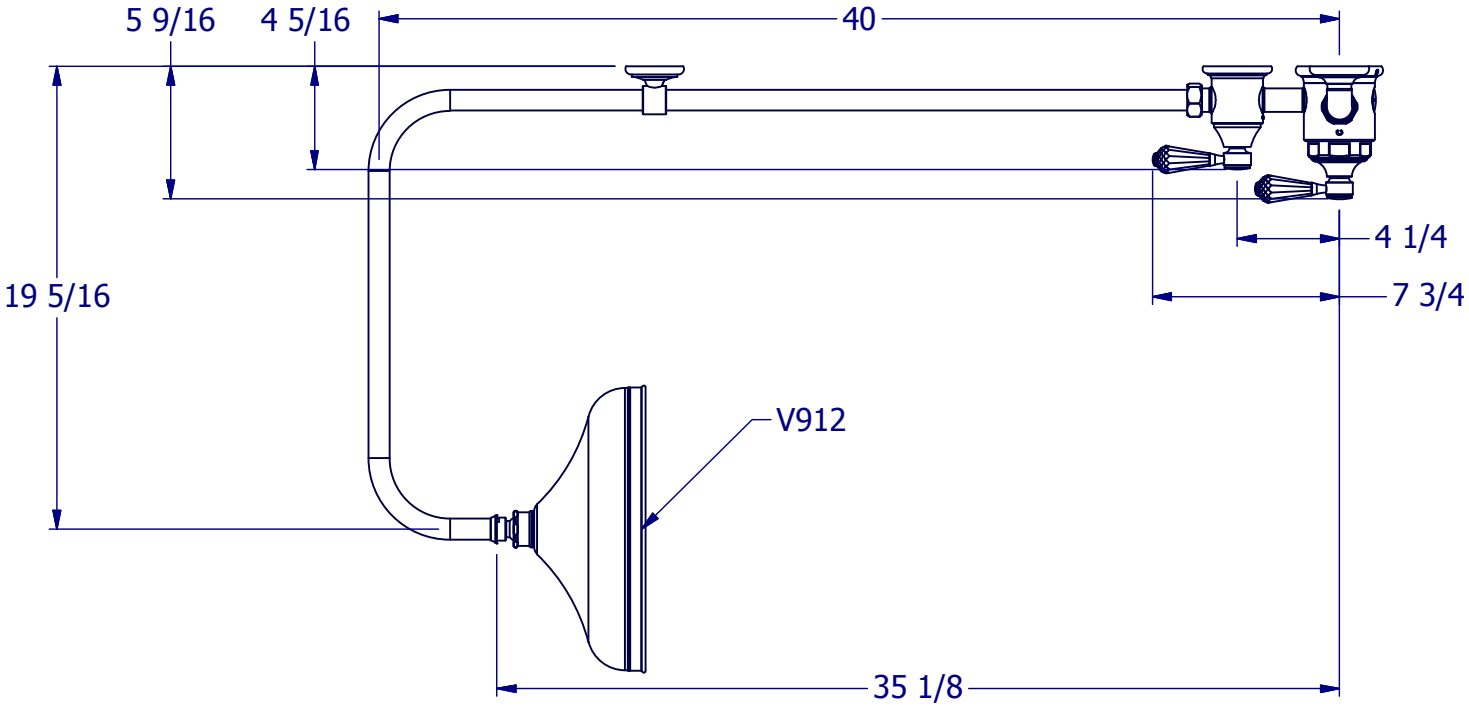

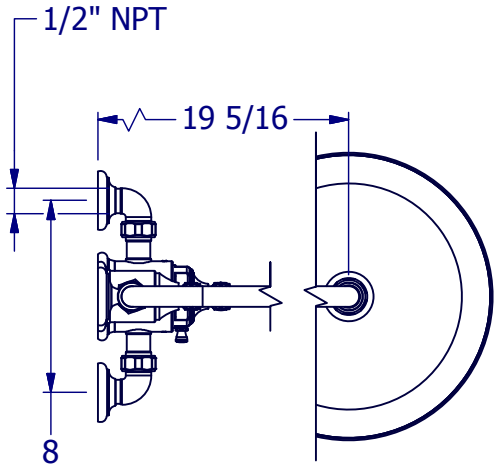

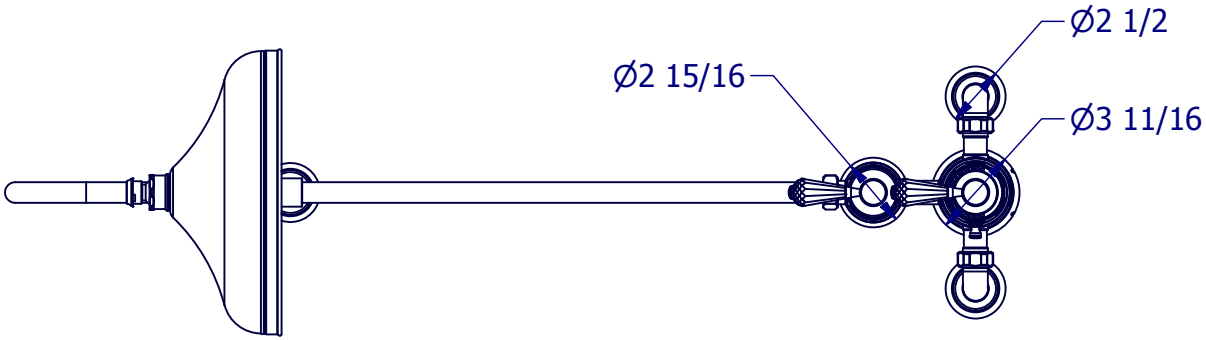

PROPERTY OF SAMUEL HEATH ©			DESIGNER		ANTONIO DUGGAL	
A4	DRG No	V2K7A-SB/SC	ISSUE NO.	A	ISSUE DATE	18/12/17