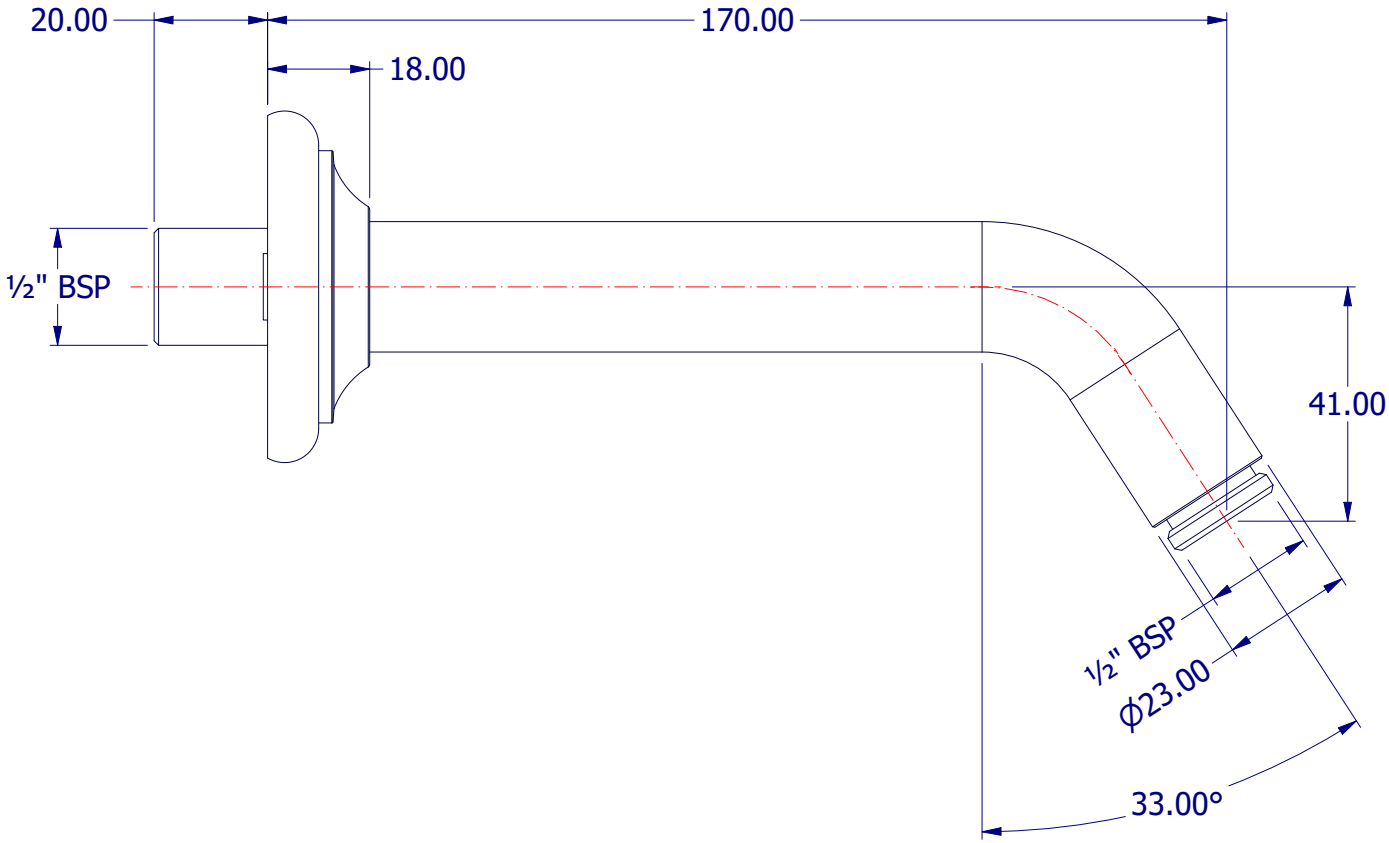

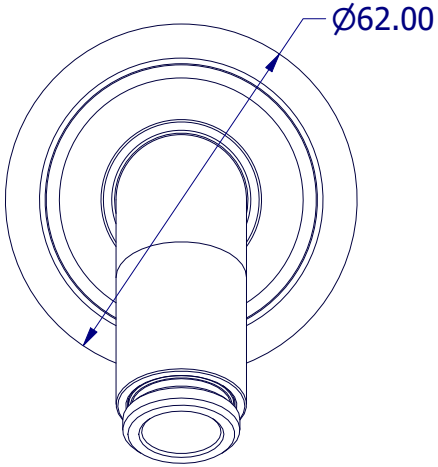

PROPERTY OF SAMUEL HEATH ©			DESIGNER		R.CLARKE	
A4	DRG No	V2K790-B	ISSUE NO.	A	ISSUE DATE	17/07/24