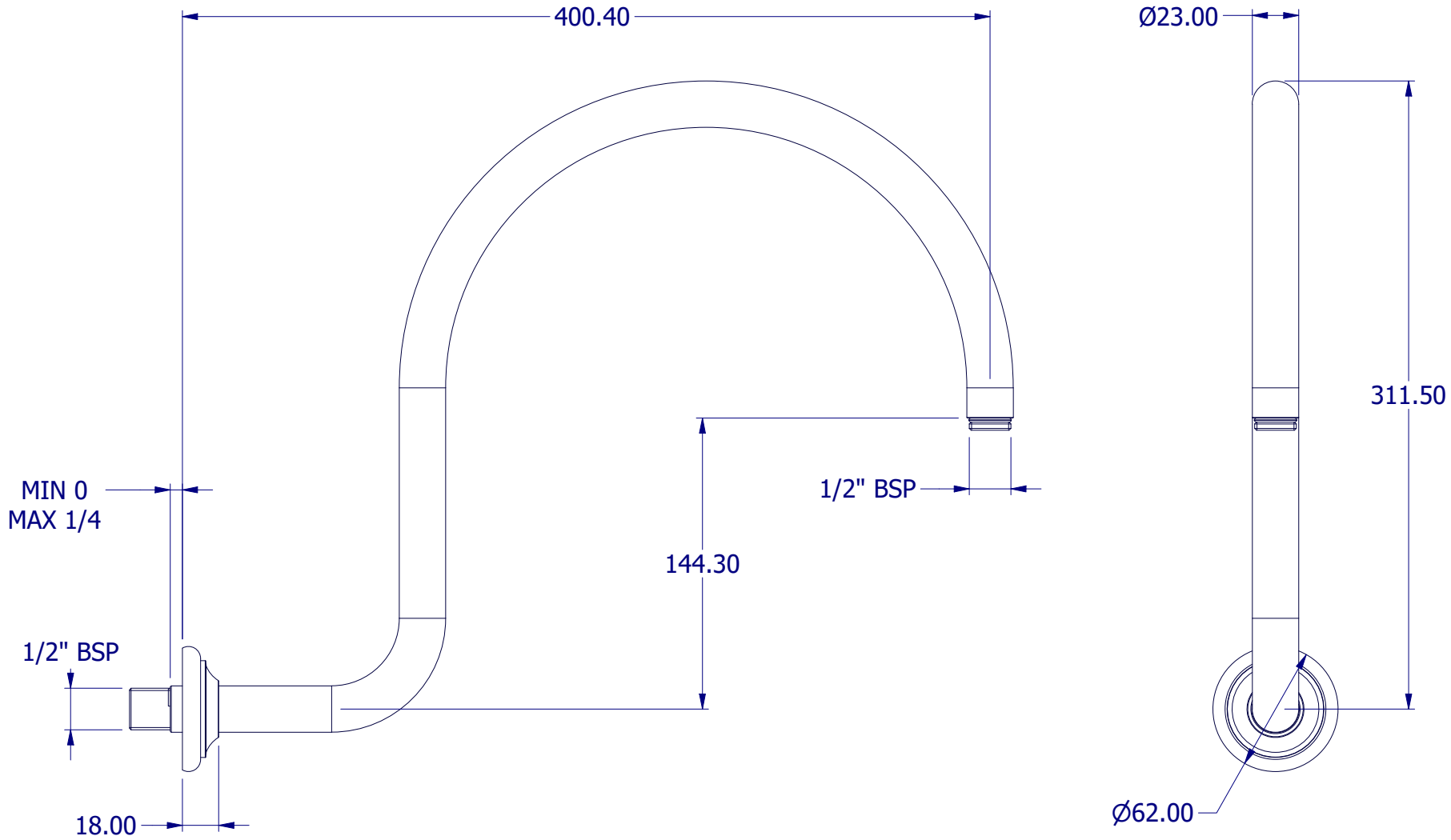

PROPERTY OF SAMUEL HEATH ©			DESIGNER		O.REEVES	
A4	DRG No	V2K621-B	ISSUE NO.	A	ISSUE DATE	30/11/25