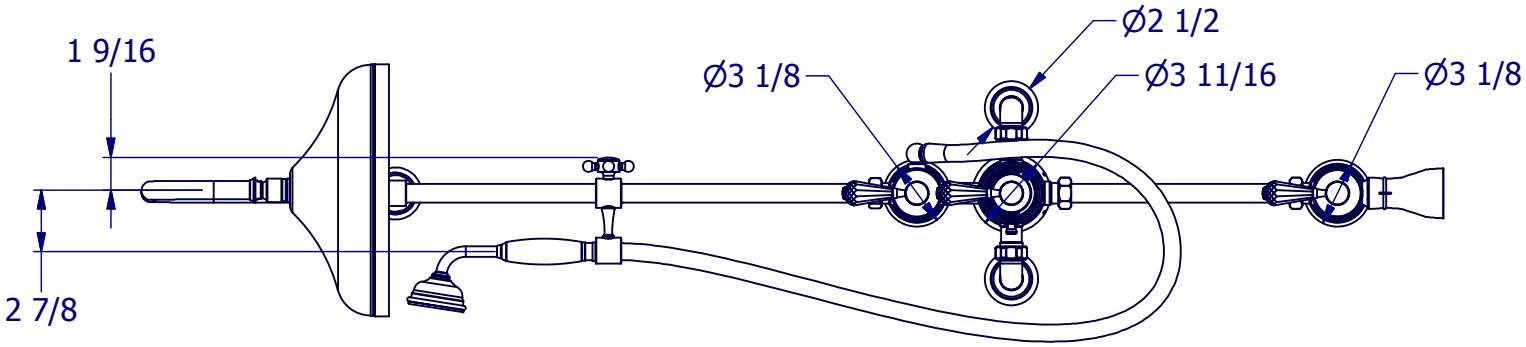

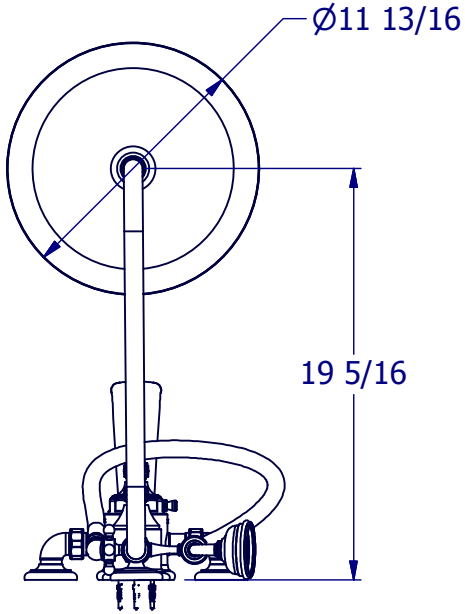

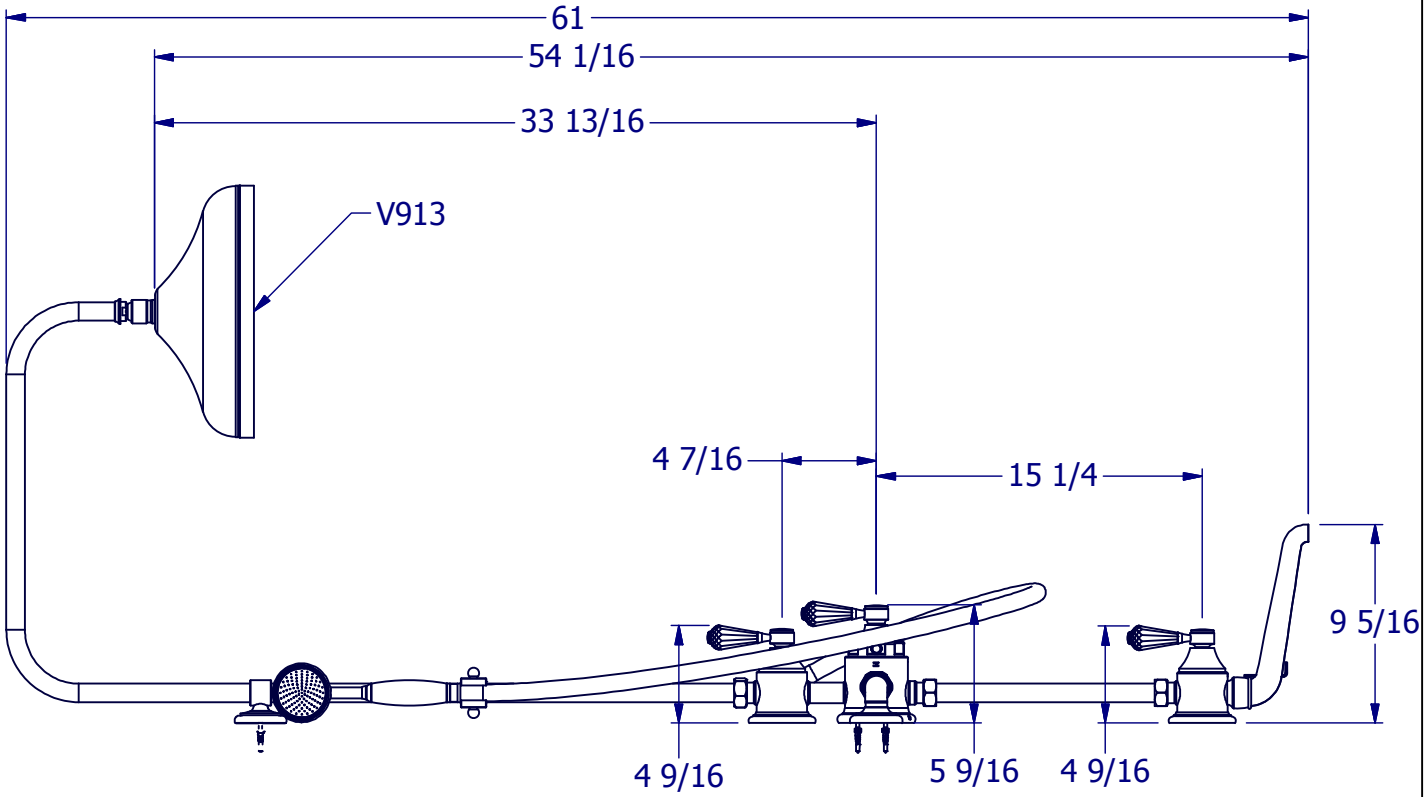

PROPERTY OF SAMUEL HEATH ©			DESIGNER		ANTONIO DUGGAL	
A4	DRG No	V2K4A-SB/SC	ISSUE NO.	B	ISSUE DATE	24.10.18