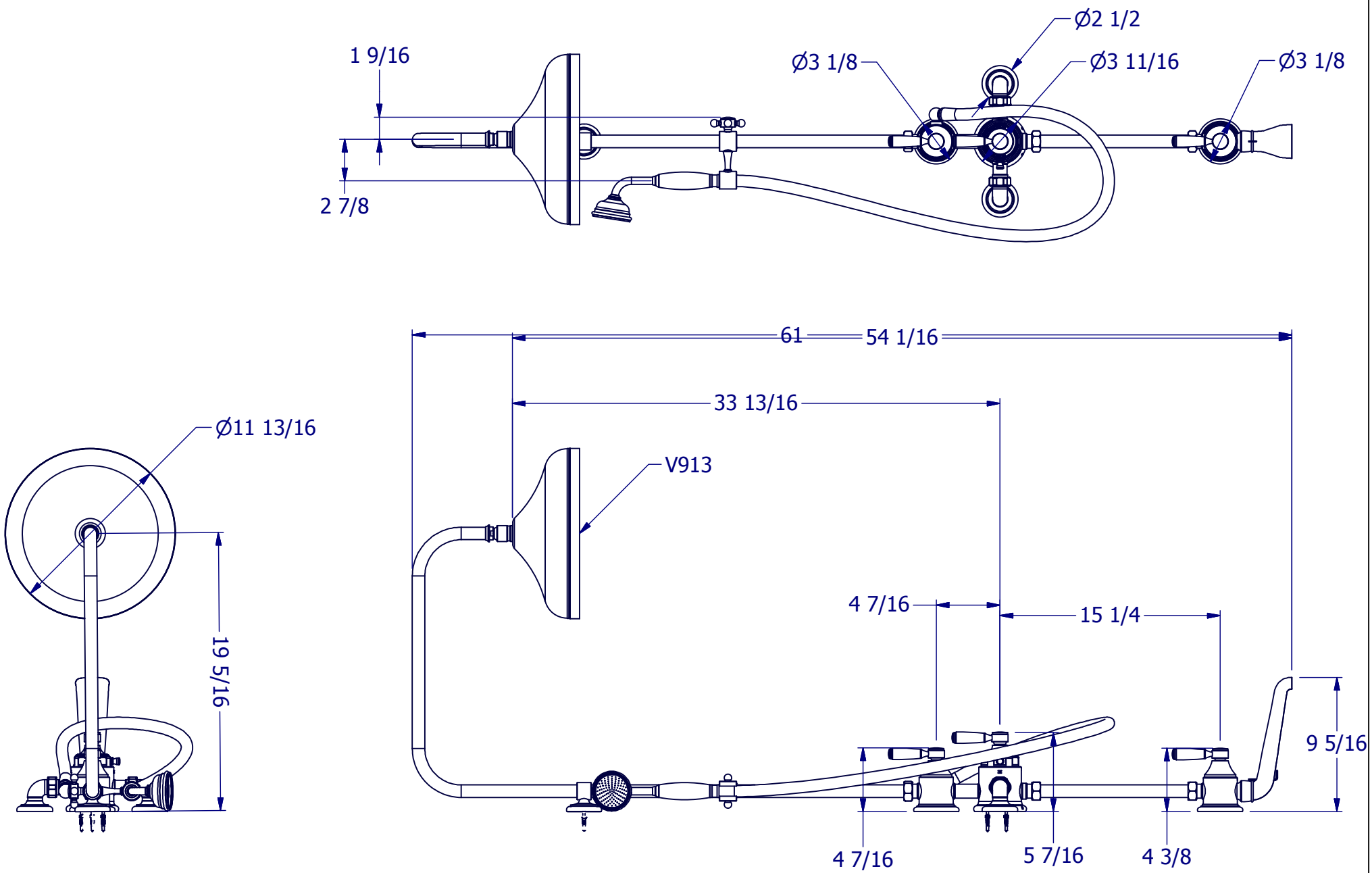


| | | | | | | |
|---|---|---|---|---|---|---|
| PROPERTY OF SAMUEL HEATH © | | | DESIGNER | | ANTONIO DUGGAL | |
| A4 | DRG No | V2K4A-CC/MM/WW/GBC | ISSUE NO. | B | ISSUE DATE | 24.10.18 |