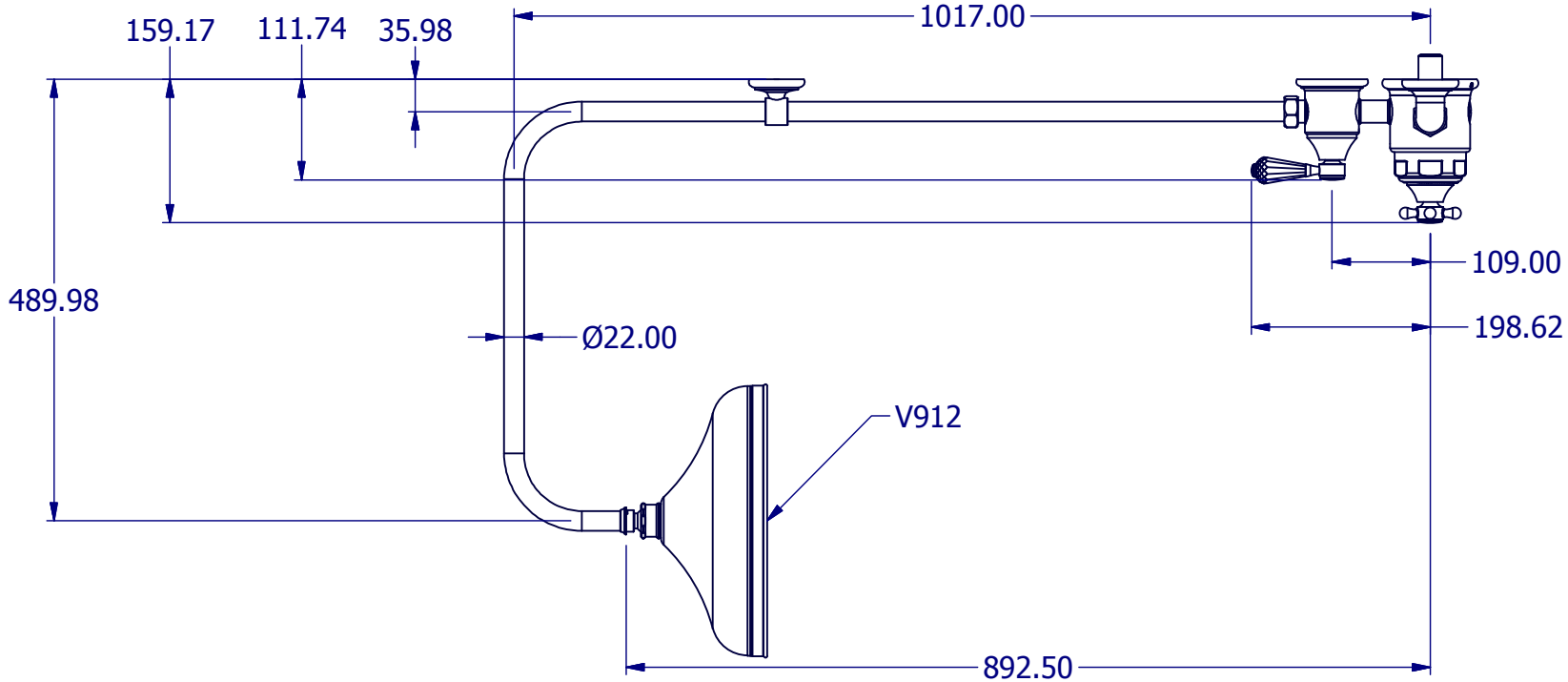

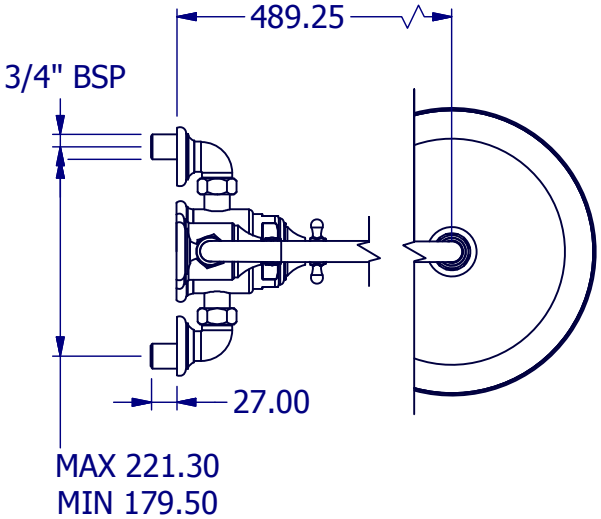

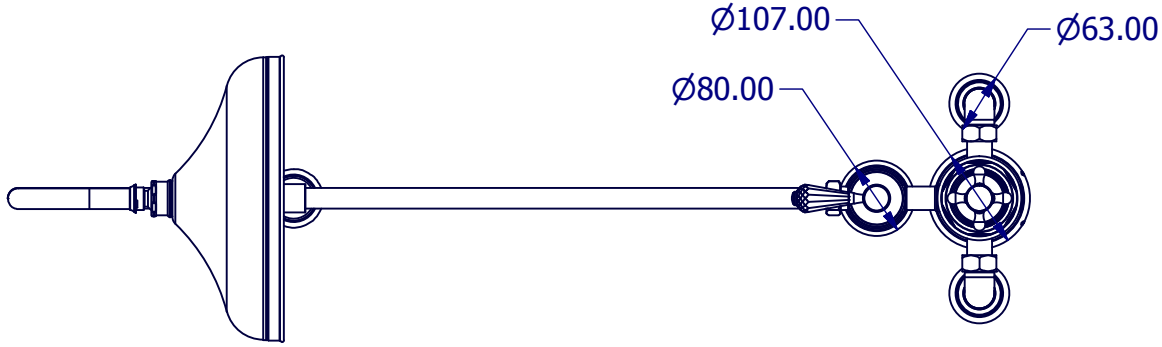

PROPERTY OF SAMUEL HEATH ©			DESIGNER		ANTONIO DUGGAL	
A4	DRG No	V2K2-XSB/XSC	ISSUE NO.	A	ISSUE DATE	14/12/17