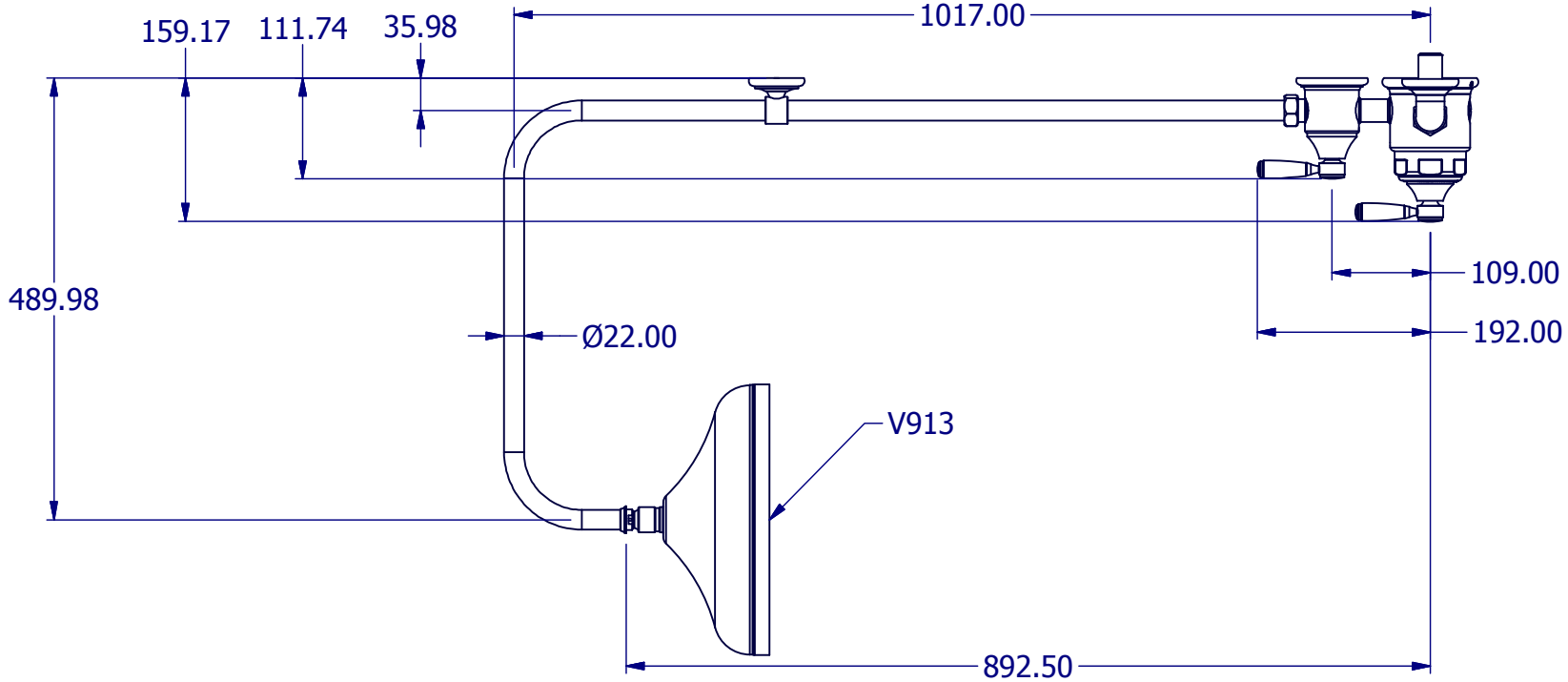

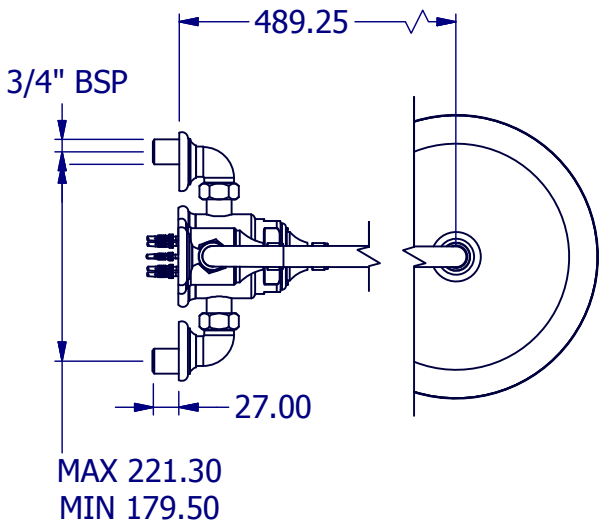

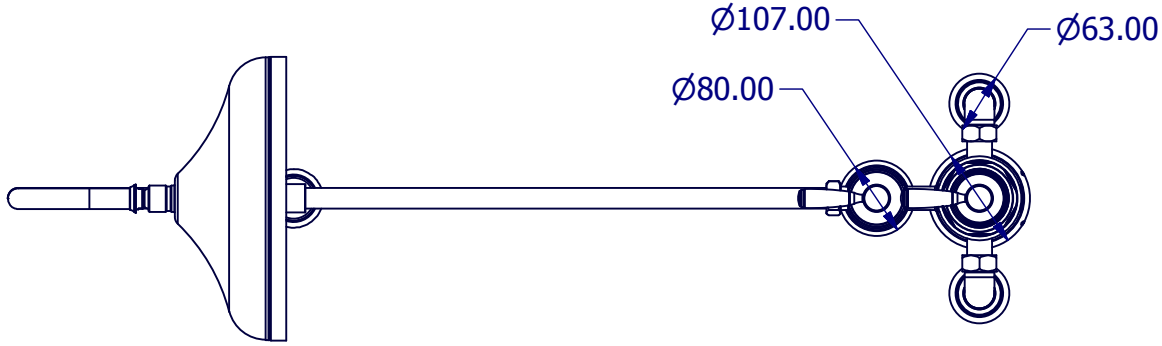

PROPERTY OF SAMUEL HEATH ©			DESIGNER		ANTONIO DUGGAL	
A4	DRG No	V2K2-CC/MM/WW/GBC	ISSUE NO.	A	ISSUE DATE	14/12/17