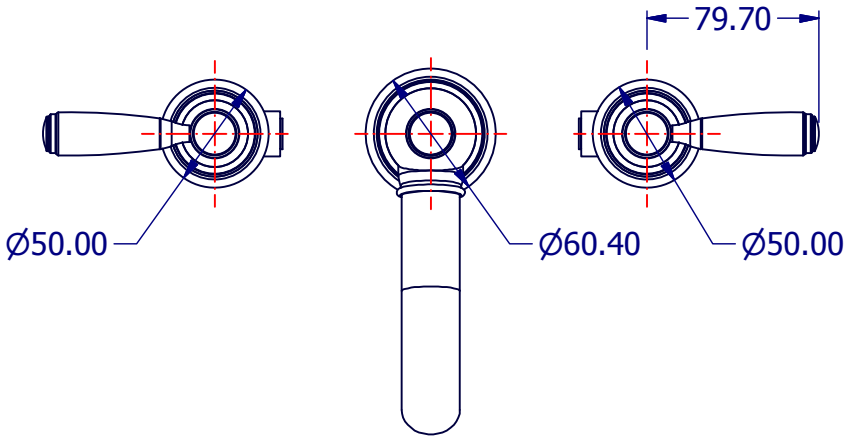

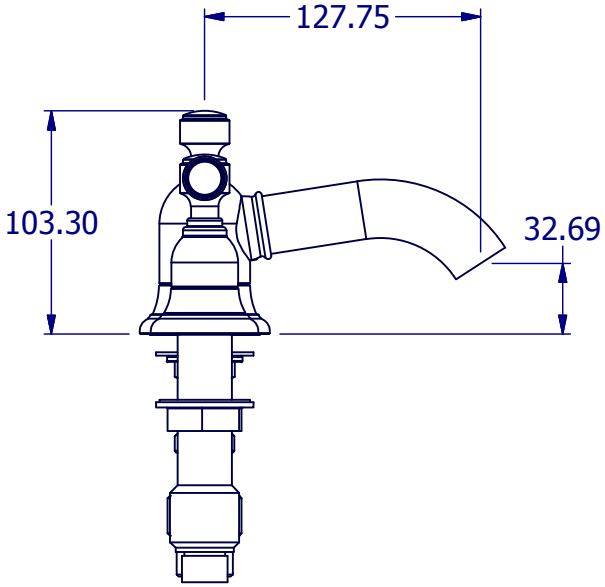

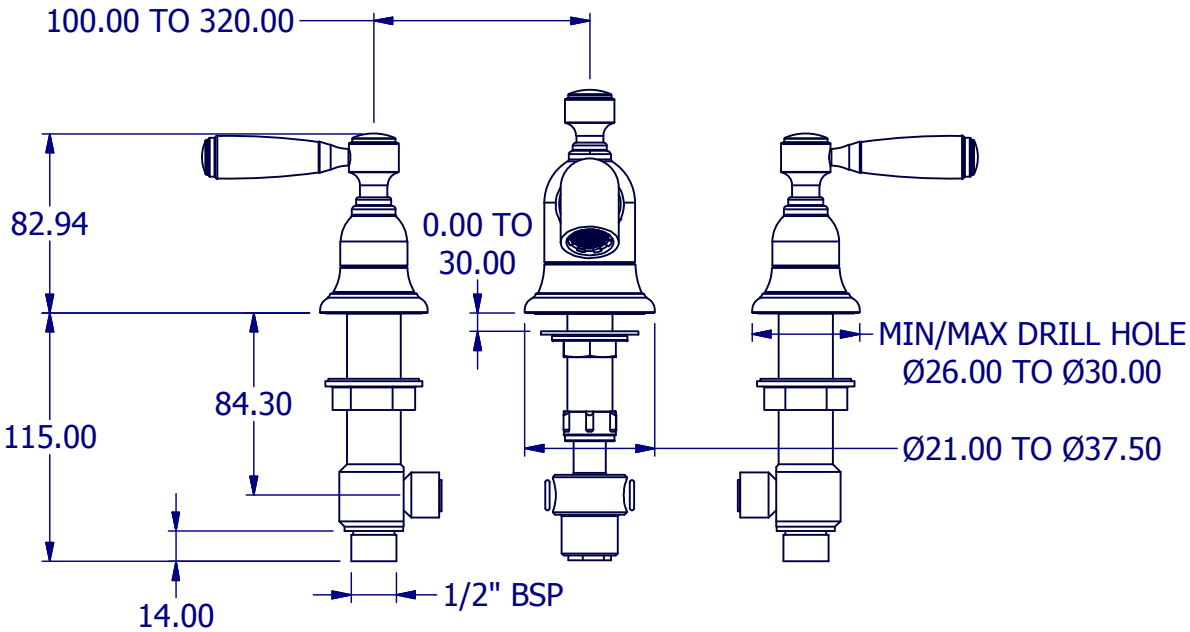

PROPERTY OF SAMUEL HEATH ©			DESIGNER		ANTONIO DUGGAL	
A4	DRG No	V2K14-M/C/W/GBC-NP	ISSUE NO.	A	ISSUE DATE	07/09/18