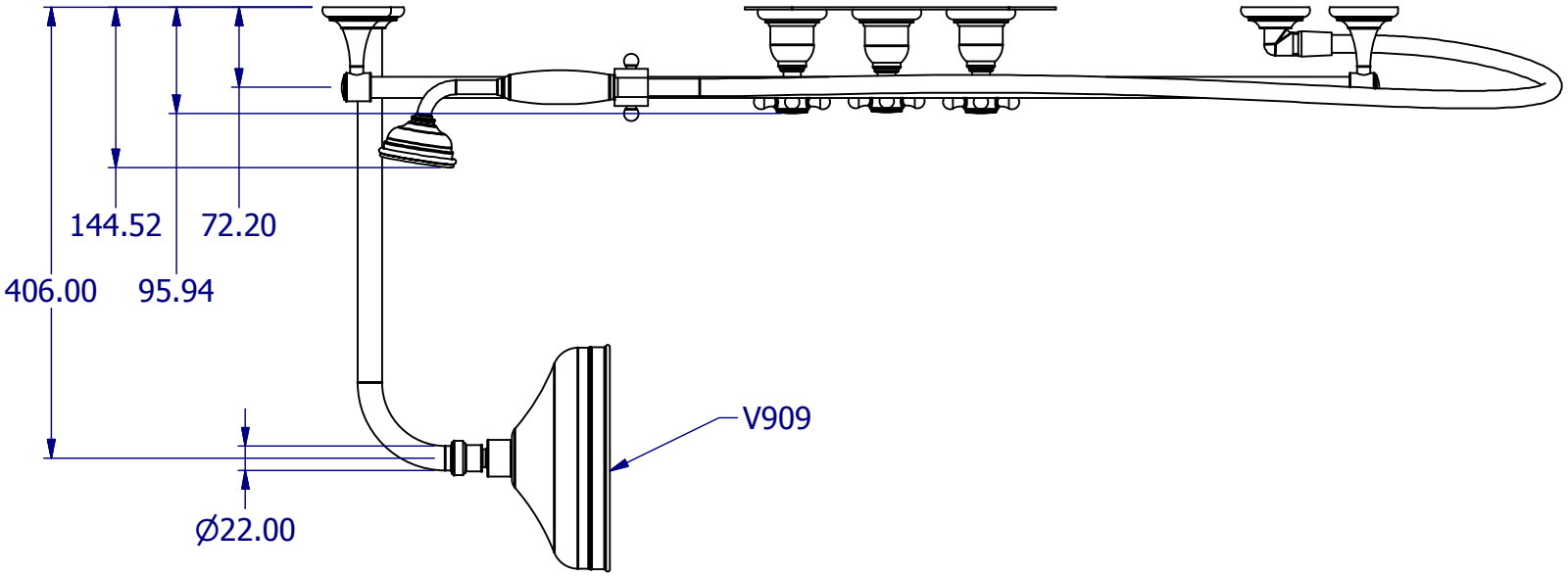

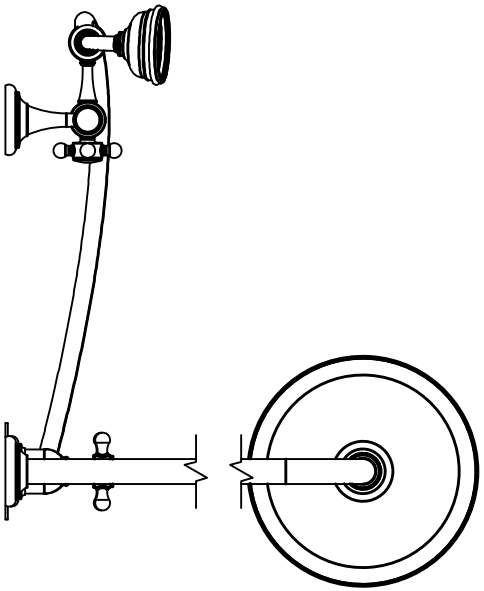

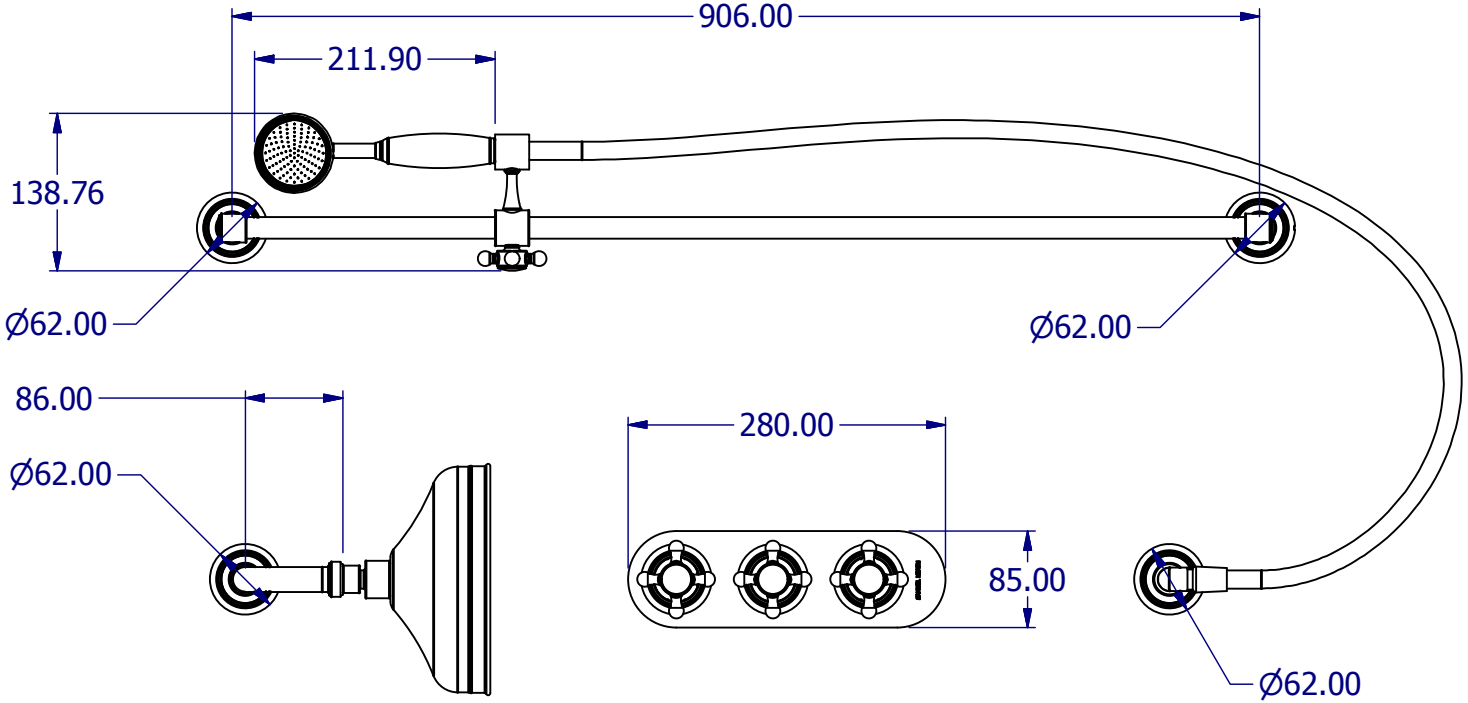

A4	DRG No	V2B1XX	ISSUE NO.	A	ISSUE DATE	13/8/10