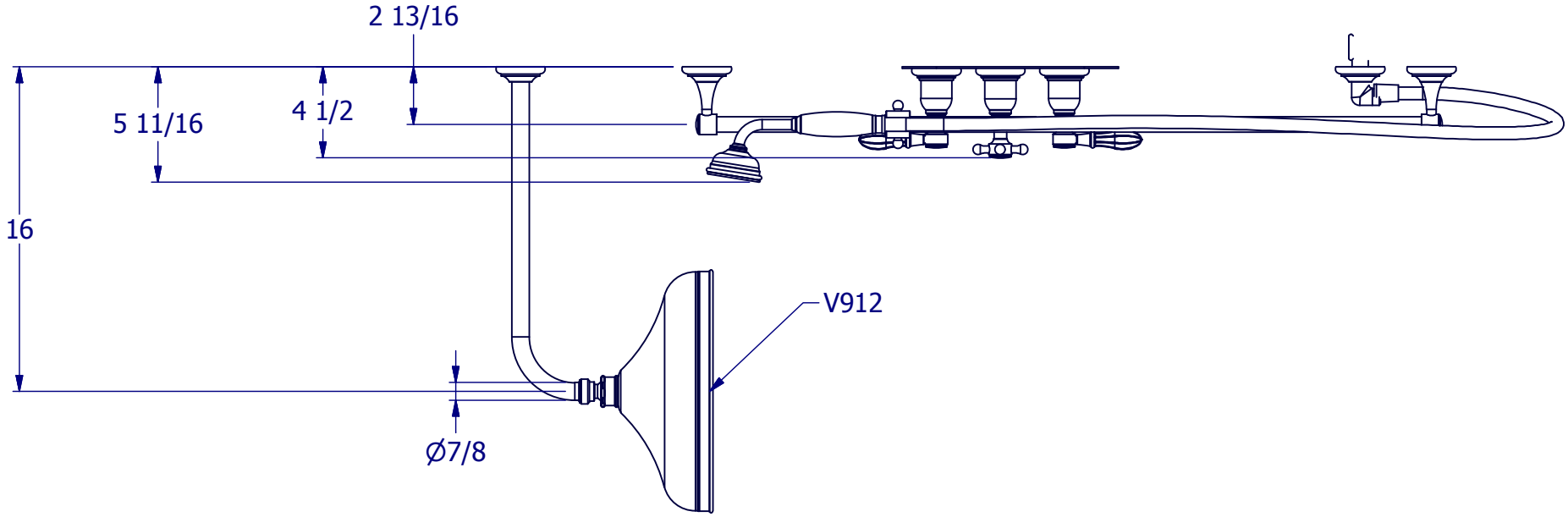

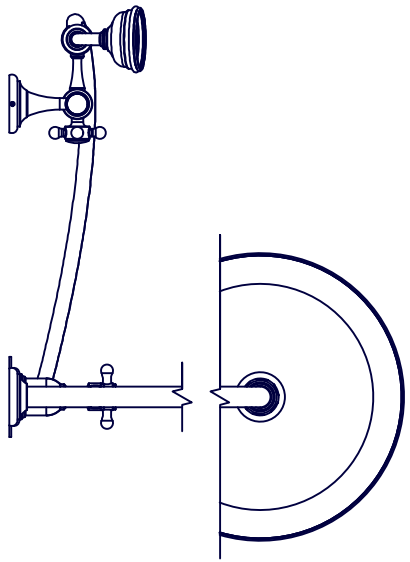

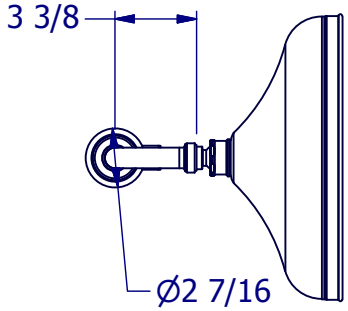

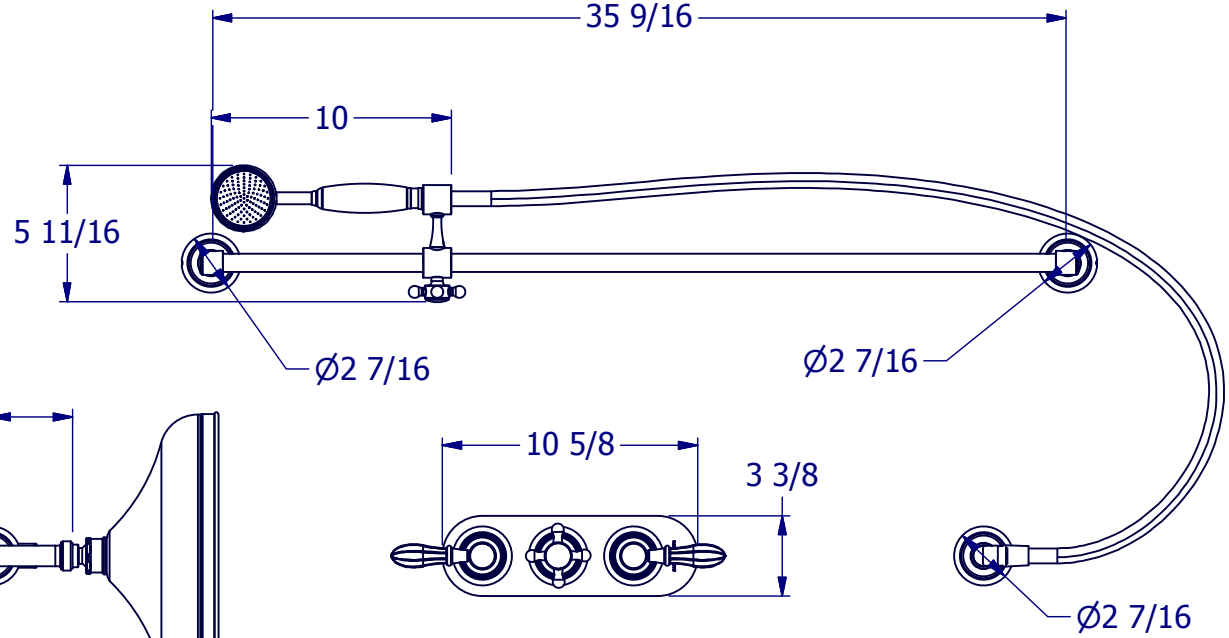

PROPERTY OF SAMUEL HEATH ©			DESIGNER		ANTONIO DUGGAL	
A4	DRG No	V2B1AXGC & V2B1XGB	ISSUE NO.	A	ISSUE DATE	30/08/17