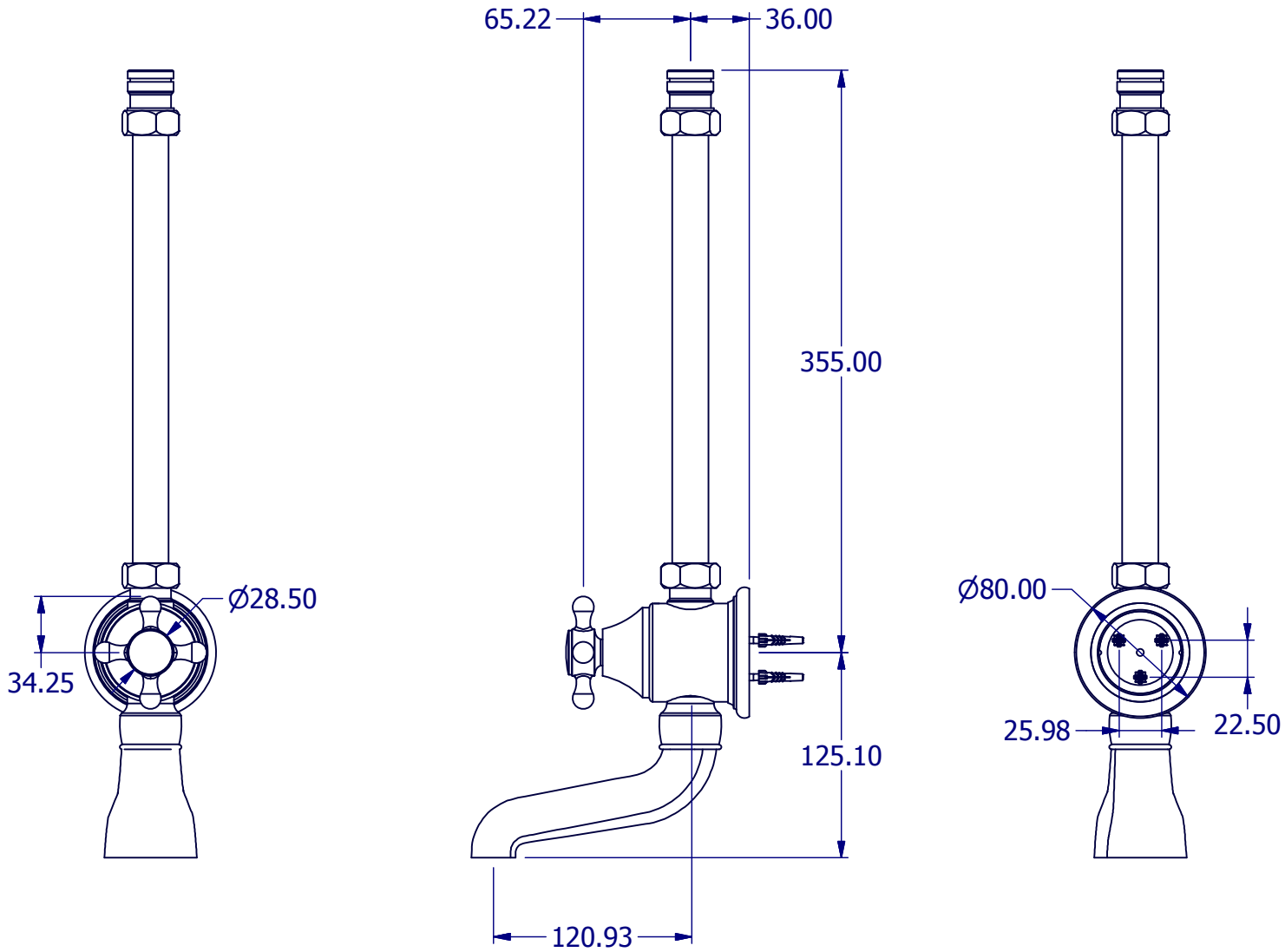

PROPERTY OF SAMUEL HEATH ©			DESIGNER		ANTONIO DUGGAL	
A4	DRG No	V228-TX	ISSUE NO.	A	ISSUE DATE	26/07/18