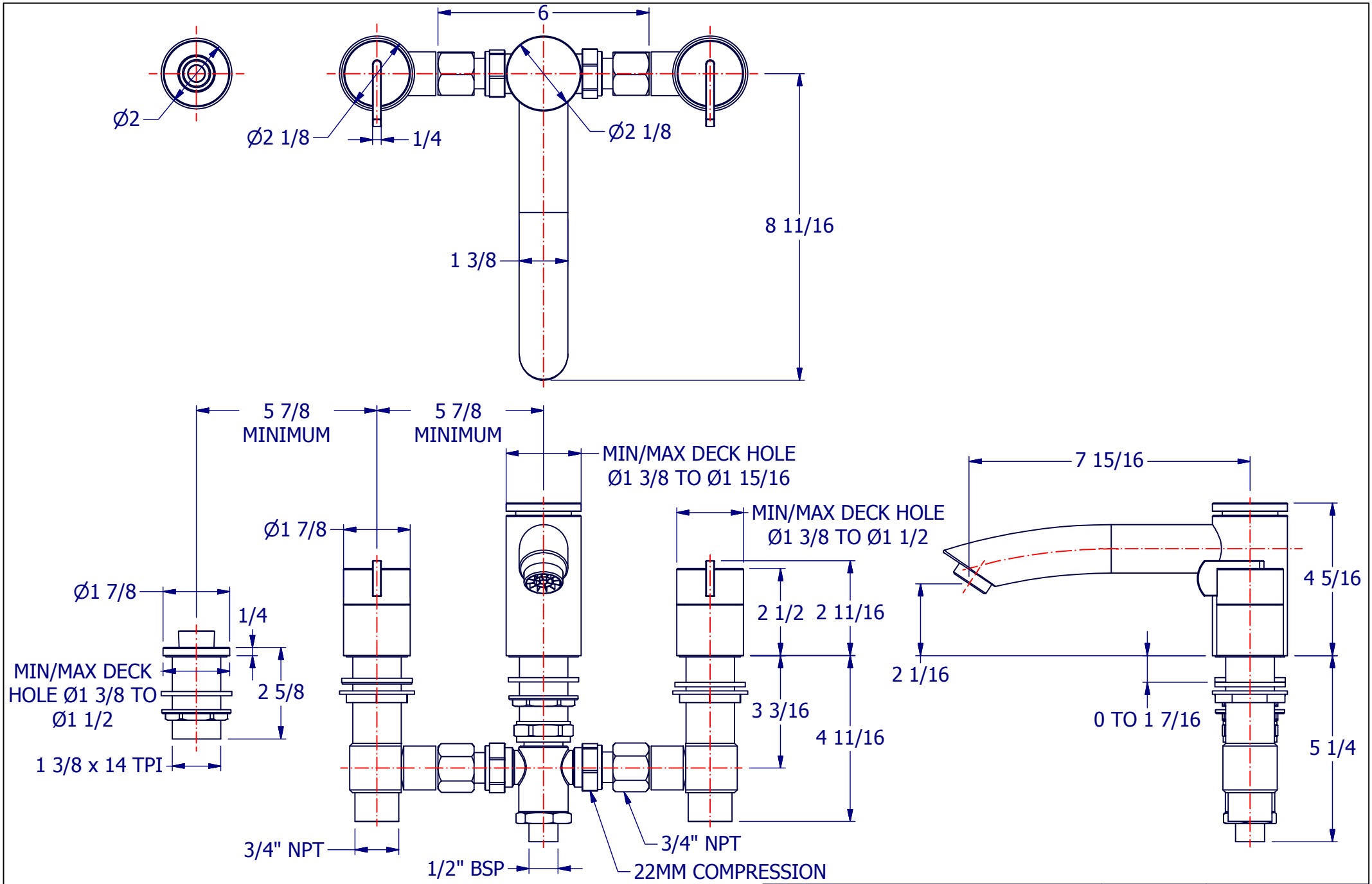

PROPERTY OF SAMUEL HEATH ©			DESIGNER		ANTONIO DUGGAL	
A4	DRG No	V148-A	ISSUE NO.	A	ISSUE DATE	30/07/18