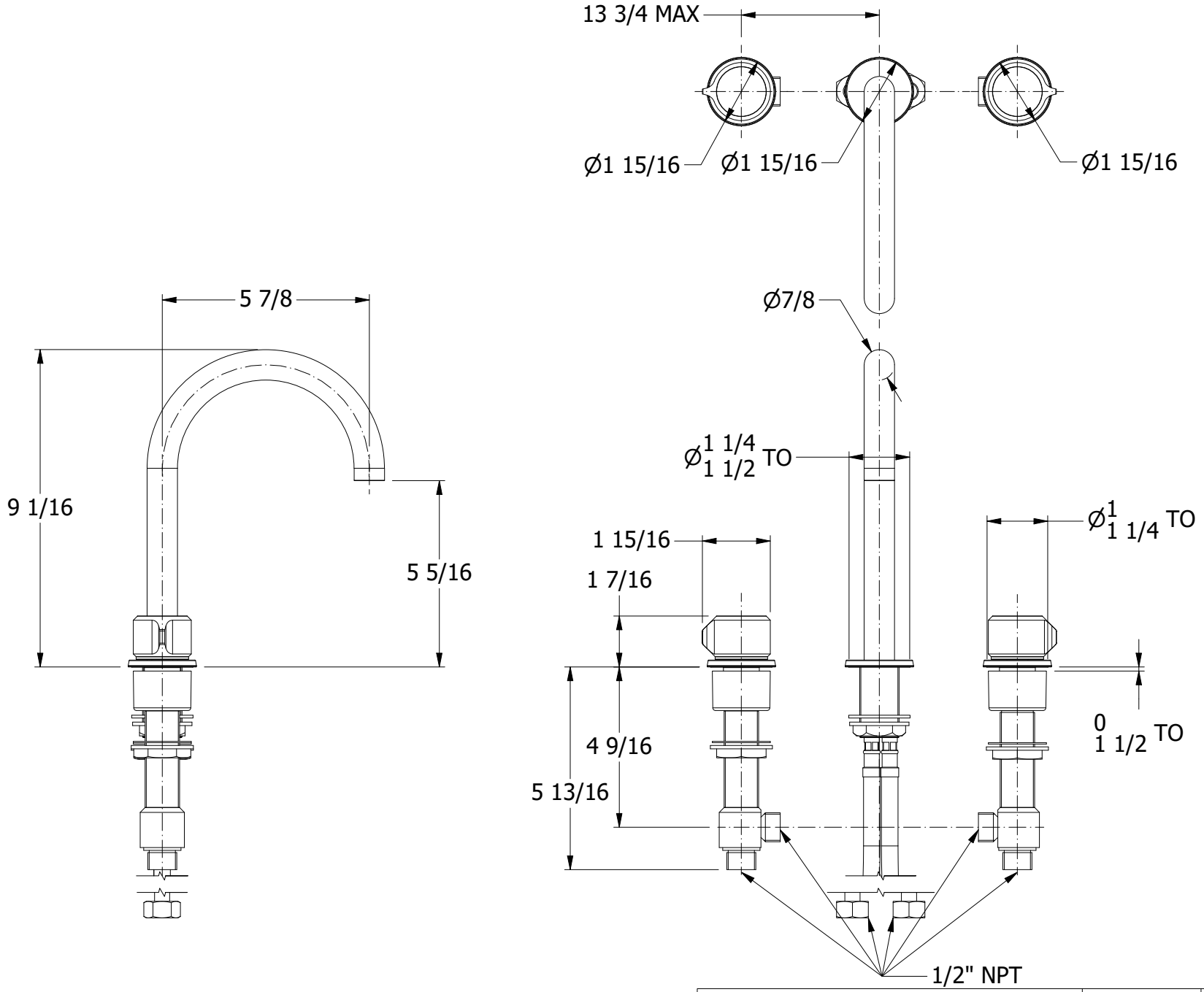

PROPERTY OF SAMUEL HEATH ©			DESIGNER		C.DANKS	
A4	DRG No	T20KA15-CTR	ISSUE NO.	A	ISSUE DATE	28.10.22