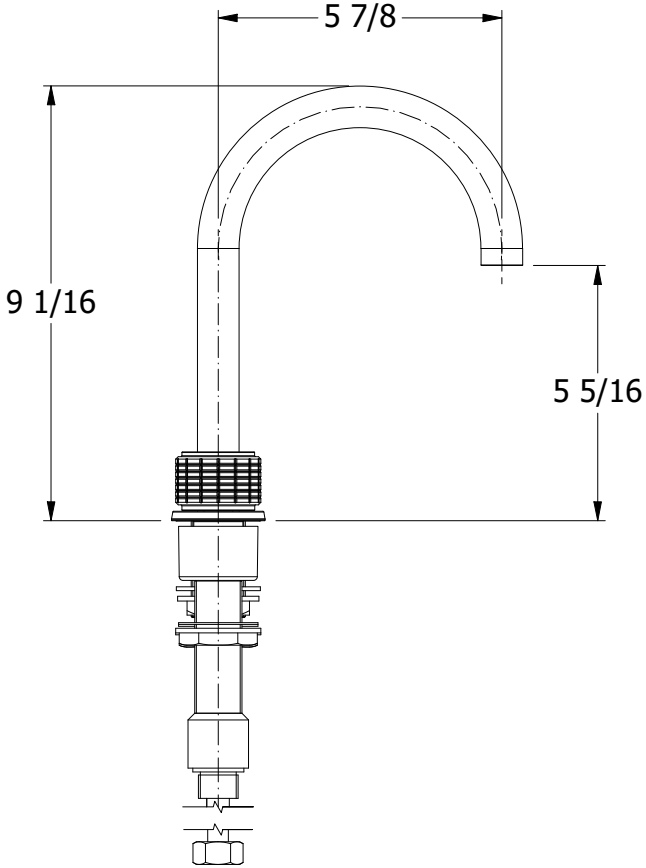


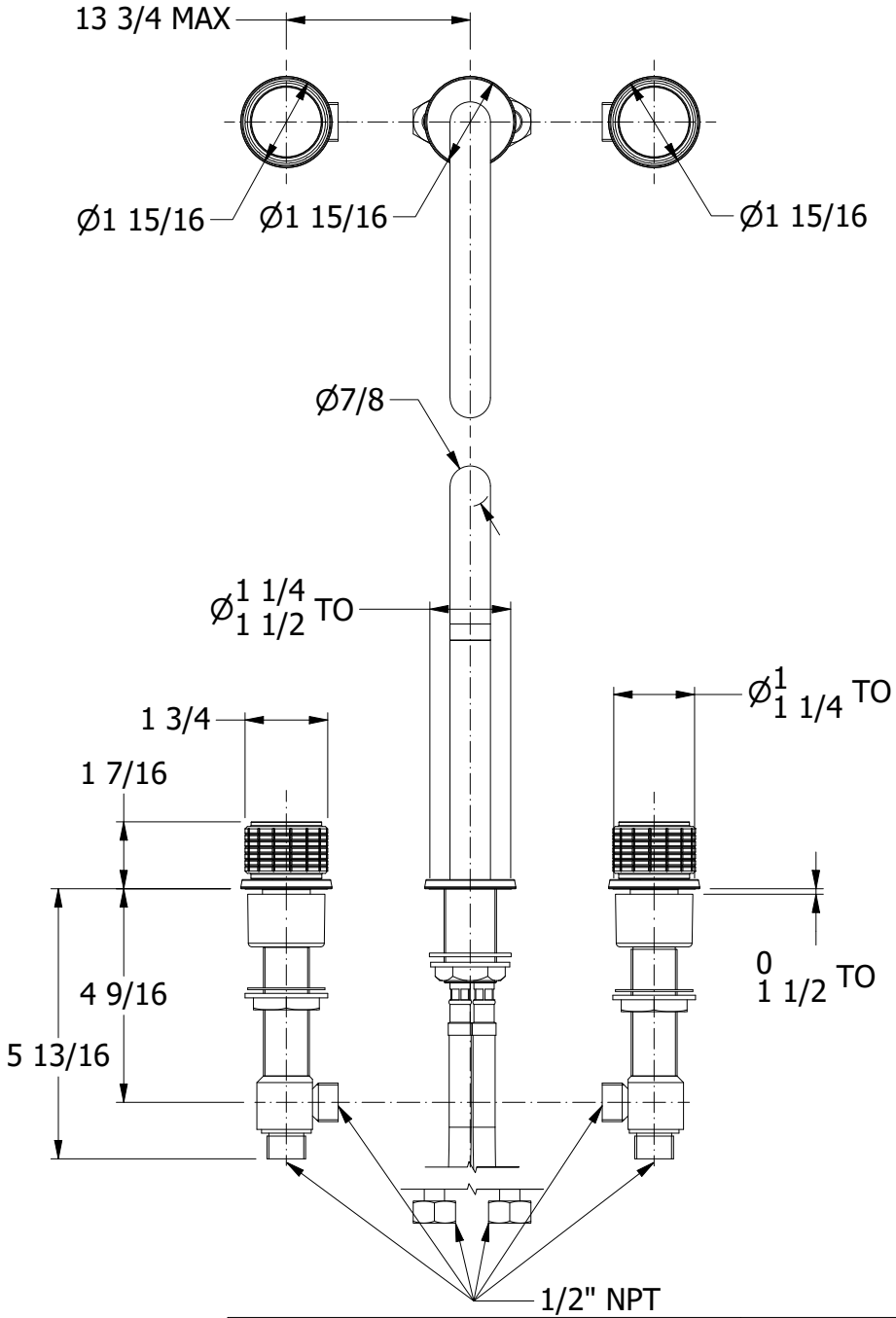


| | | | | | | |
|---|---|---|---|---|---|---|
| PROPERTY OF SAMUEL HEATH © | | | DESIGNER | | C.DANKS | |
| A4 | DRG No | T20KA15-COR | ISSUE NO. | A | ISSUE DATE | 28.10.22 |