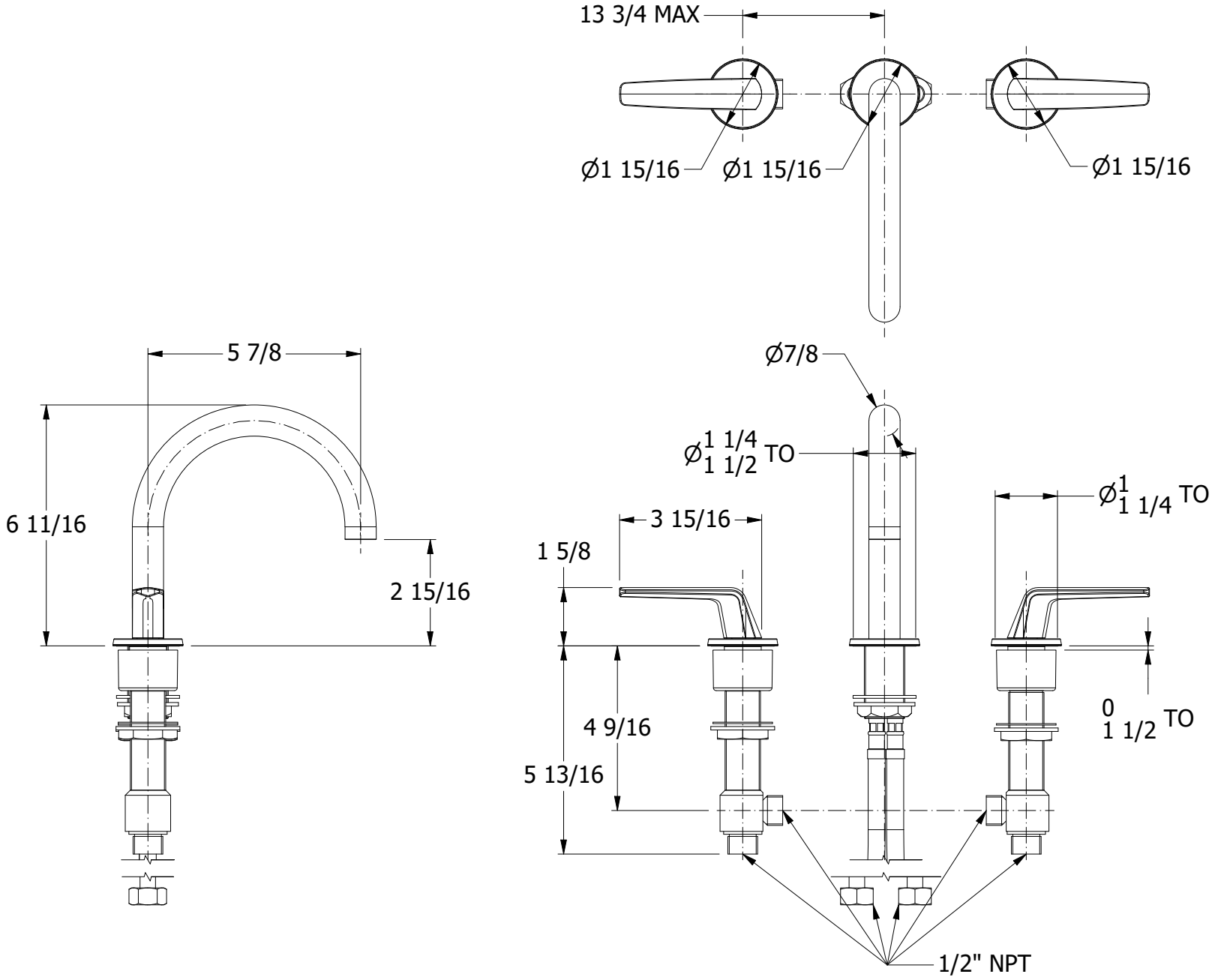

PROPERTY OF SAMUEL HEATH ©			DESIGNER		C.DANKS	
A4	DRG No	T20KA14-CTL	ISSUE NO.	A	ISSUE DATE	27.10.22