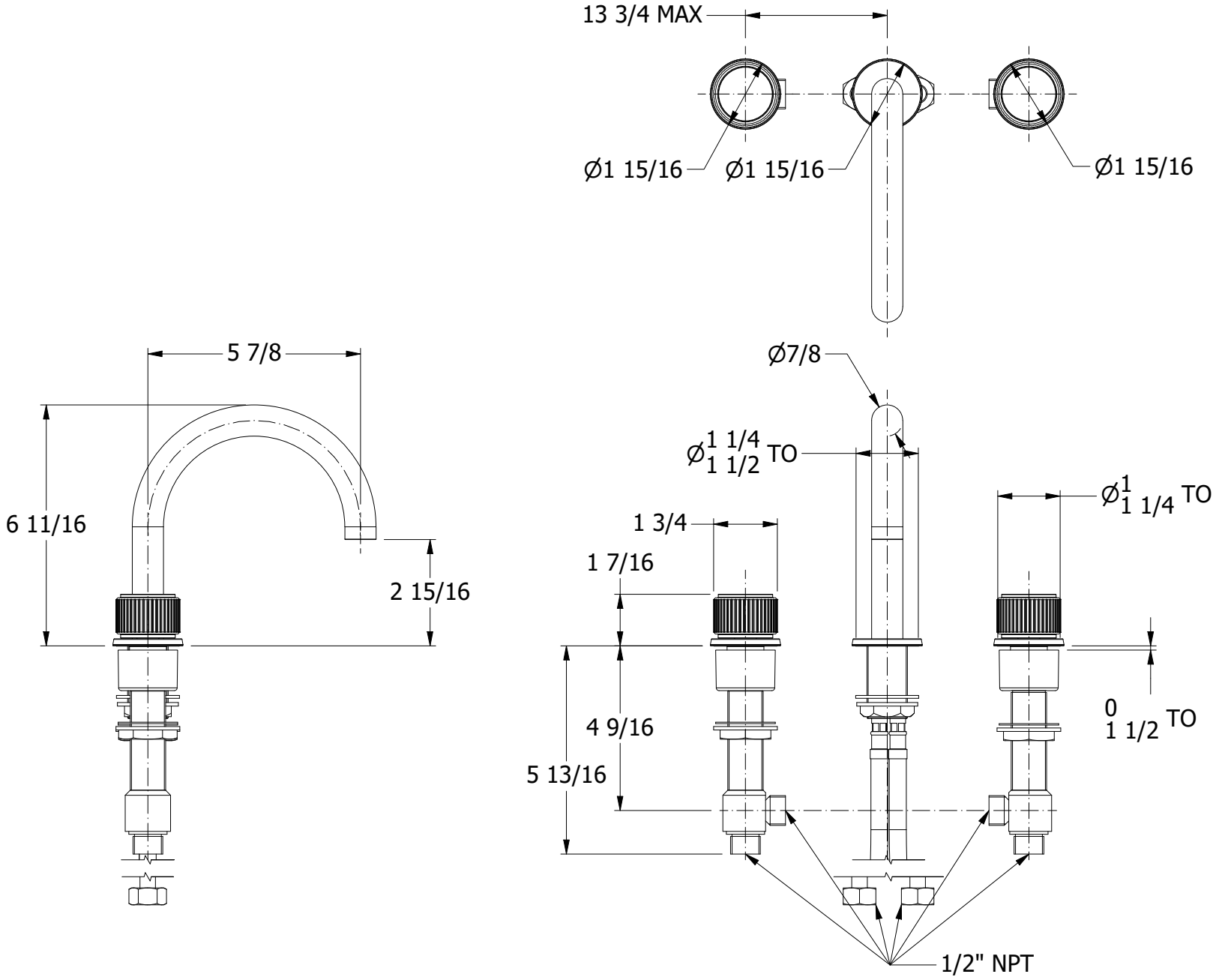


| PROPERTY OF SAMUEL HEATH © | | | DESIGNER | | C.DANKS | |
|---|---|---|---|---|---|---|
| A4 | DRG No | T20KA14-CGR | ISSUE NO. | A | ISSUE DATE | 27.10.22 |