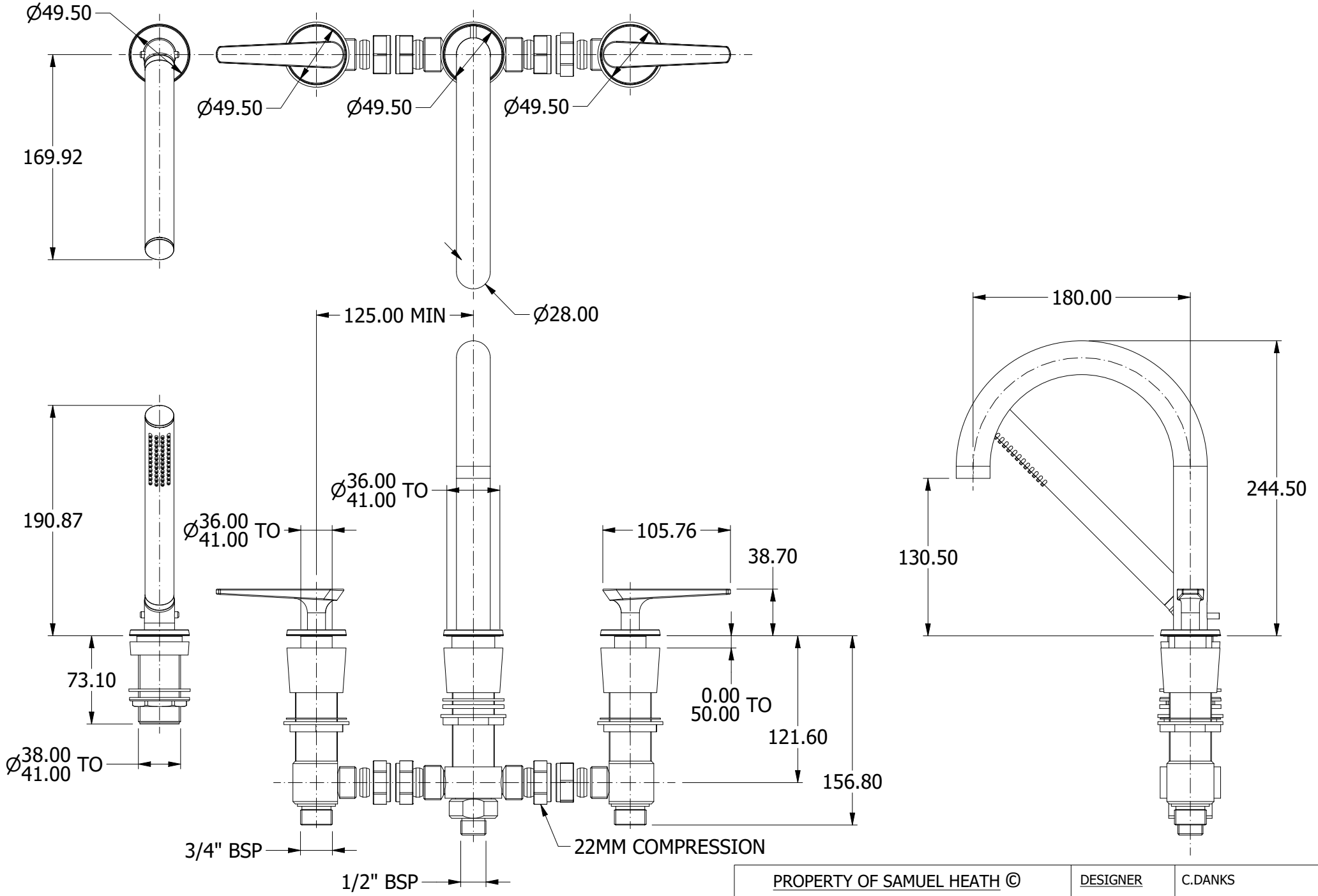

PROPERTY OF SAMUEL HEATH ©			DESIGNER		C.DANKS	
A4	DRG No	T20K48-COL	ISSUE NO.	A	ISSUE DATE	24.10.22