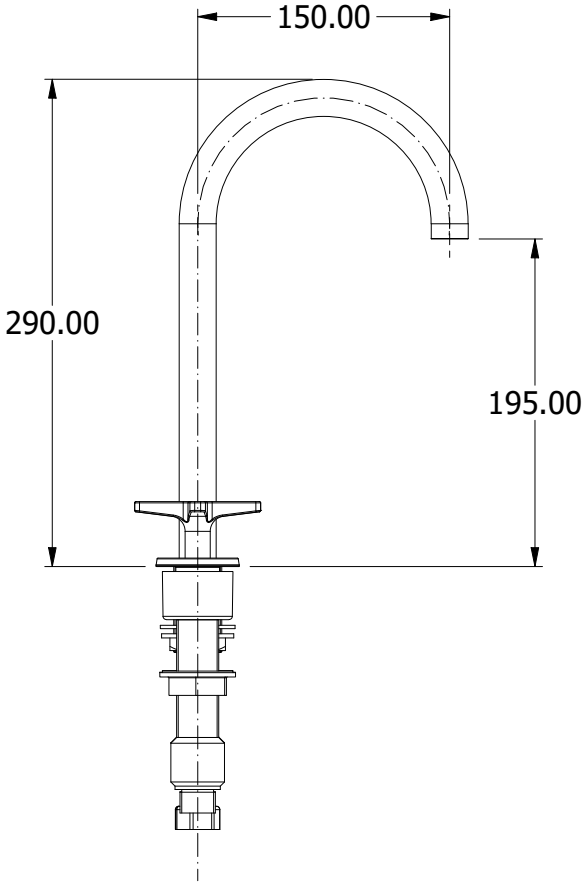

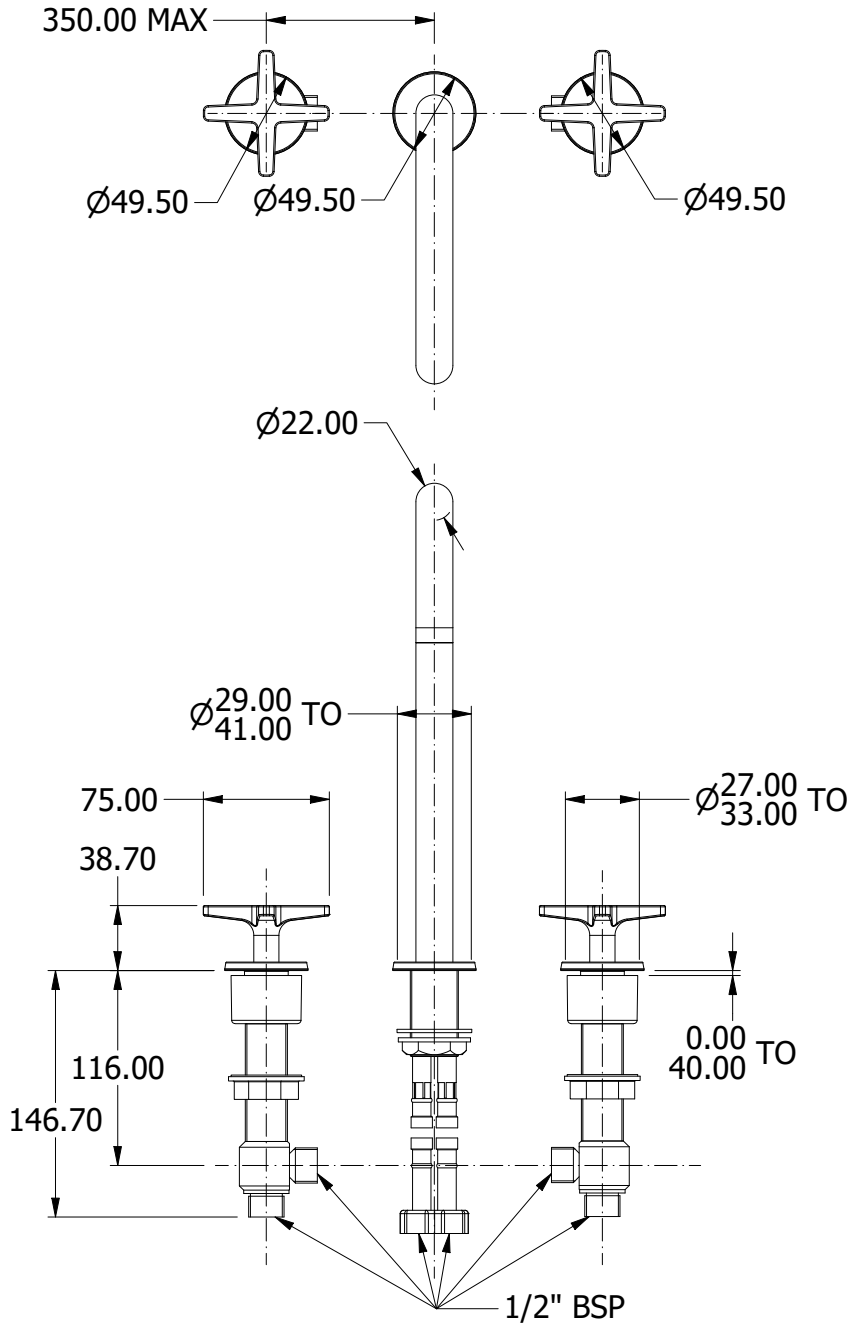

PROPERTY OF SAMUEL HEATH ©			DESIGNER		C.DANKS	
A4	DRG No	T20K16-COX	ISSUE NO.	A	ISSUE DATE	11.10.22