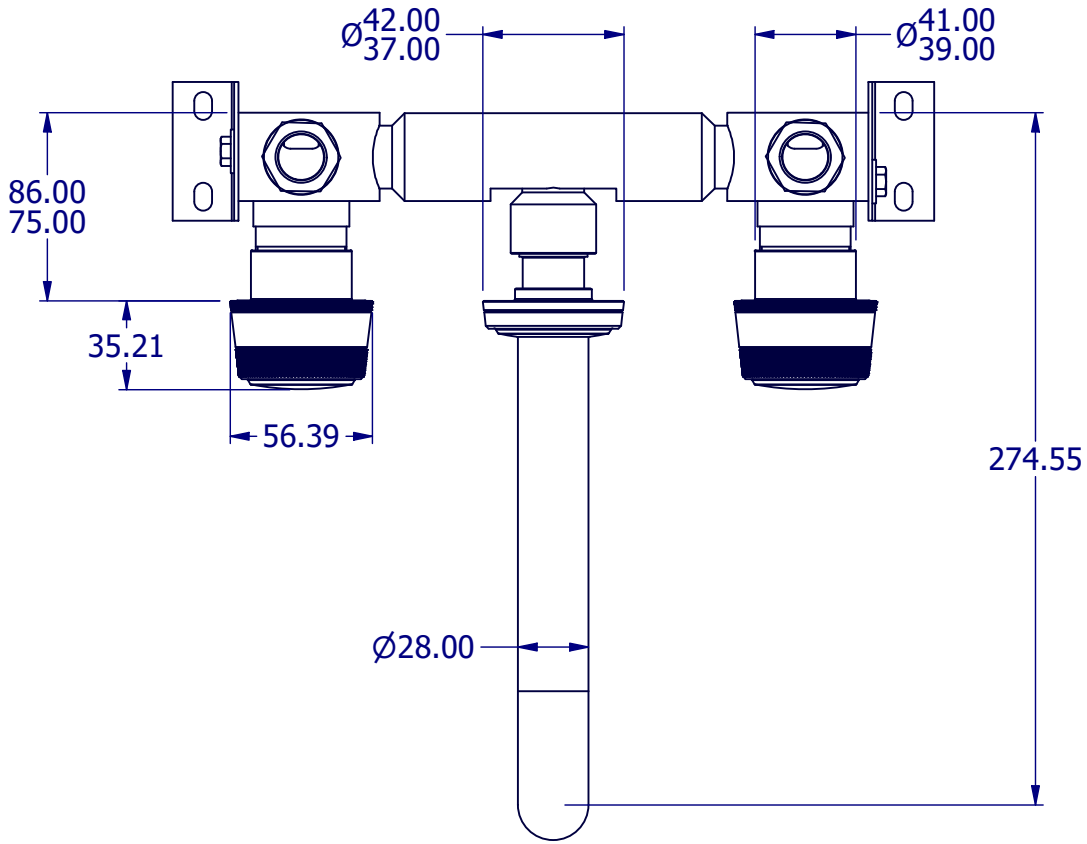

SEE INSTALLATION KIT DRAWING
UK & EU - V718-IS-XX
US - V718-AIS-XX

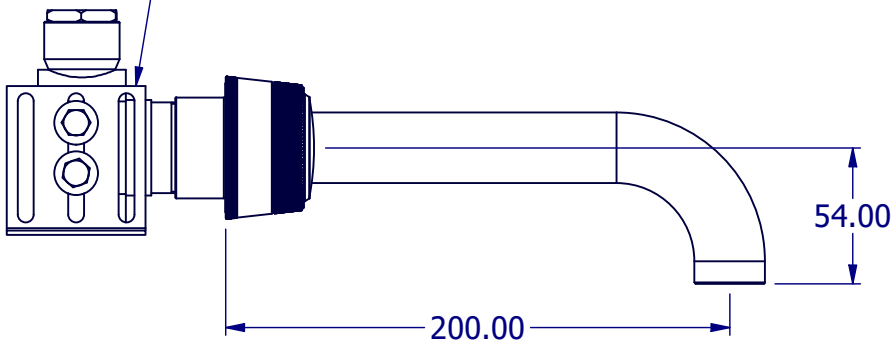

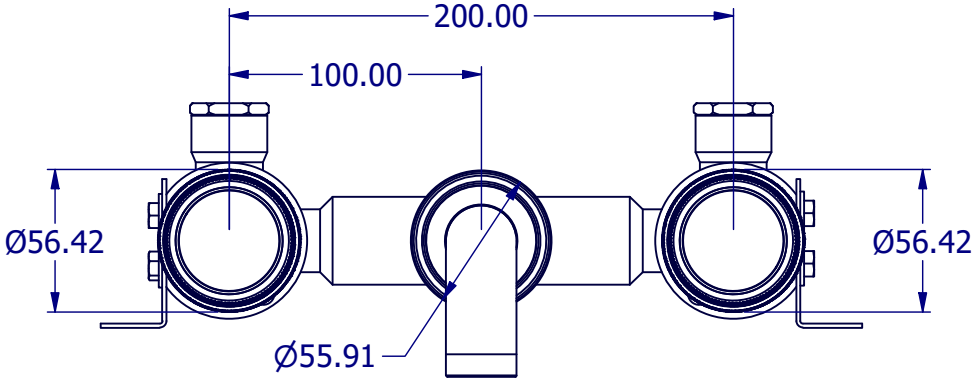

PROPERTY OF SAMUEL HEATH ©			DESIGNER		K.WHIELDON	
A4	DRG No	T11K47-R	ISSUE NO.	A	ISSUE DATE	25/03/24