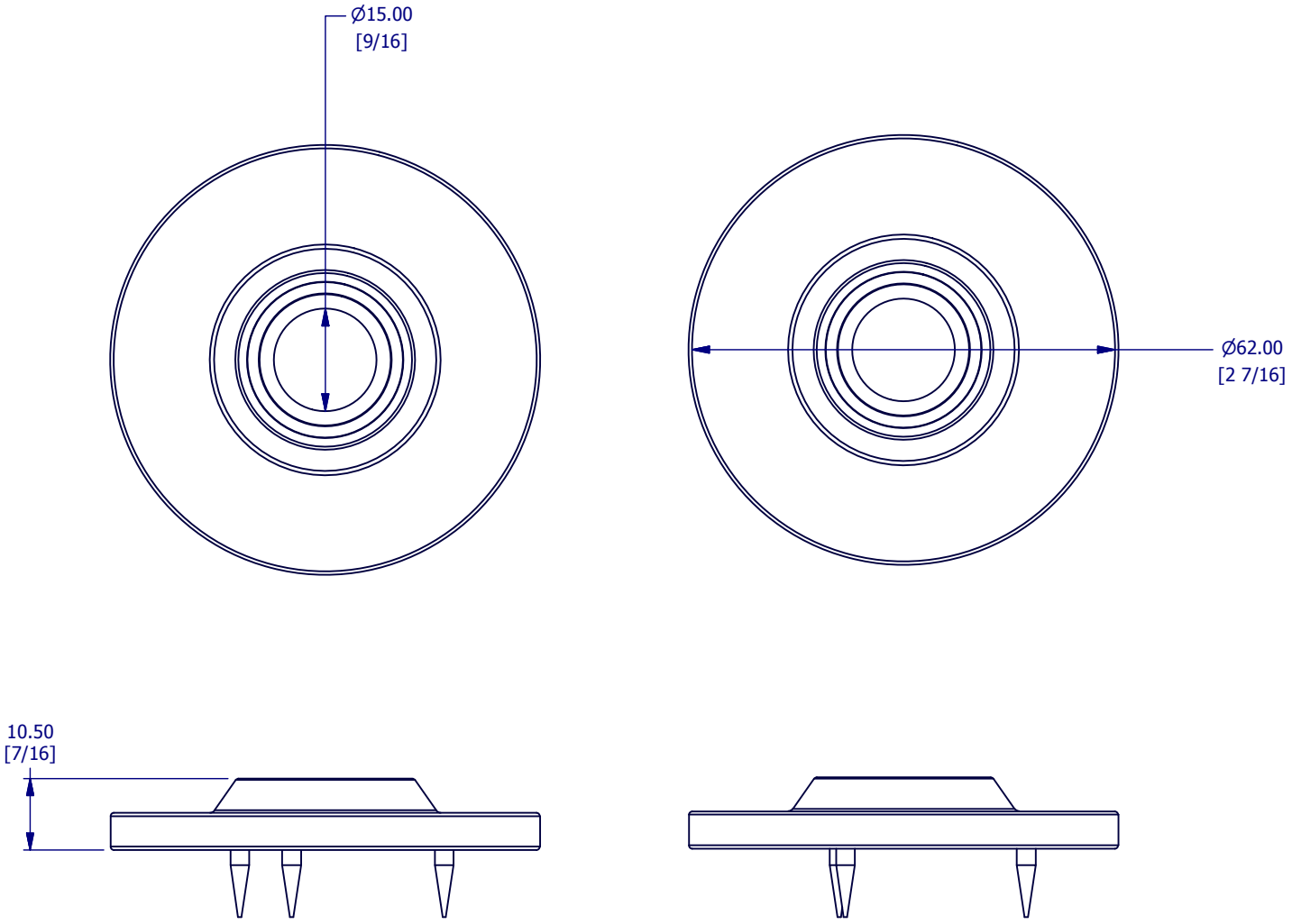

PROPERT OF SAMUEL HEATH ©			DESIGNER		ALI SHAMI	
A4	DRG No	P8001-B	ISSUE NO.	2	ISSUE DATE	12/11/14