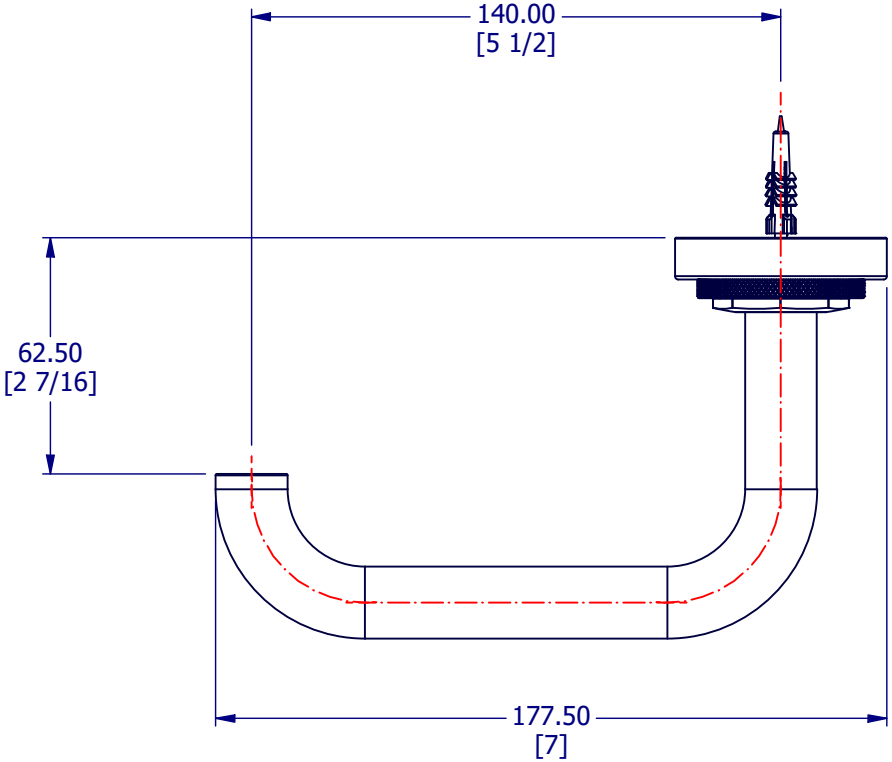

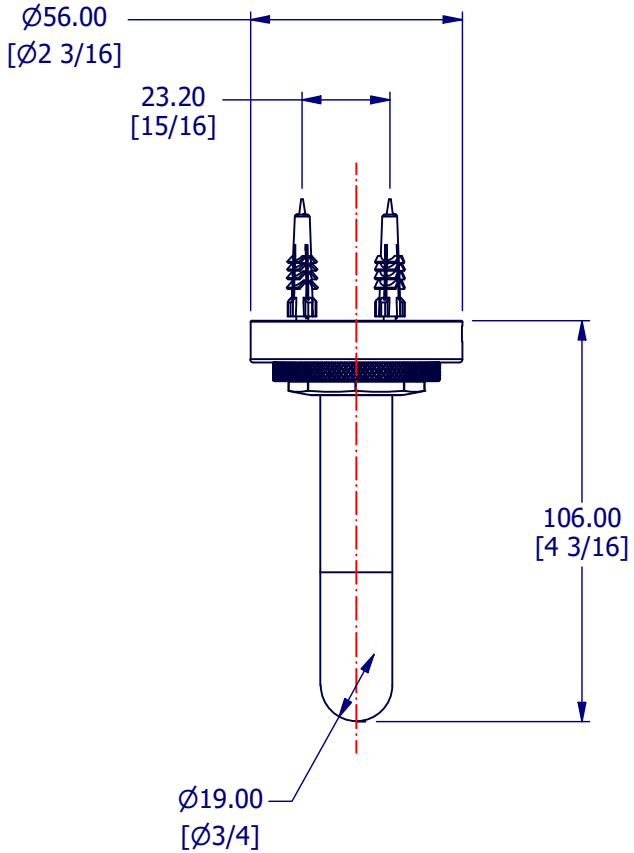

PROPERTY OF SAMUEL HEATH ©			DESIGNER		C.DANKS	
A4	DRG No	N7637-LH-K	ISSUE NO.	C	ISSUE DATE	26.10.20