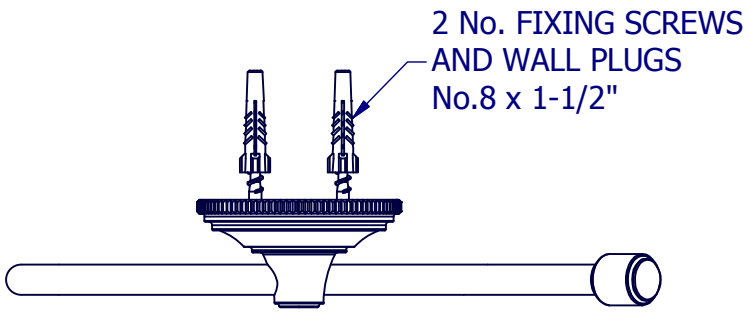

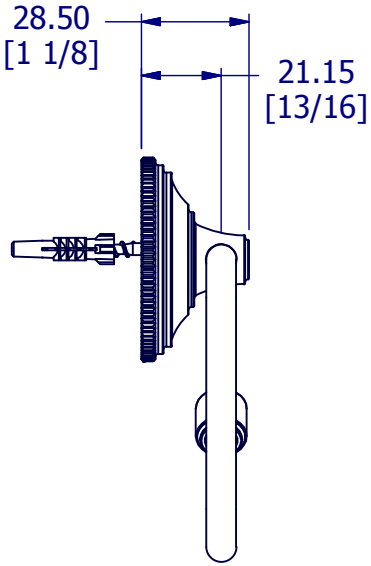

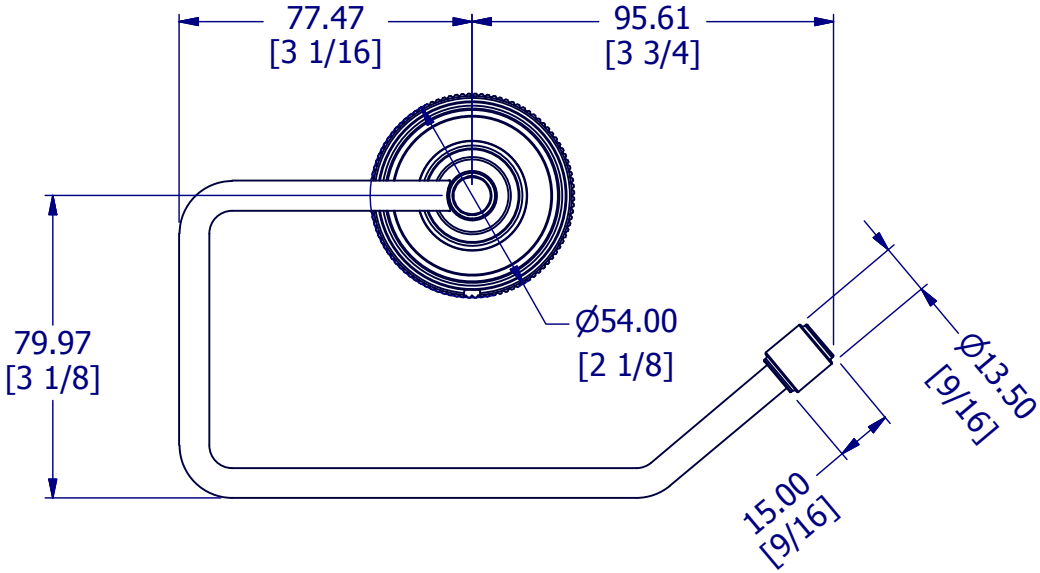

A4	DRG No	N6637	ISSUE NO.	A	ISSUE DATE	07/02/13