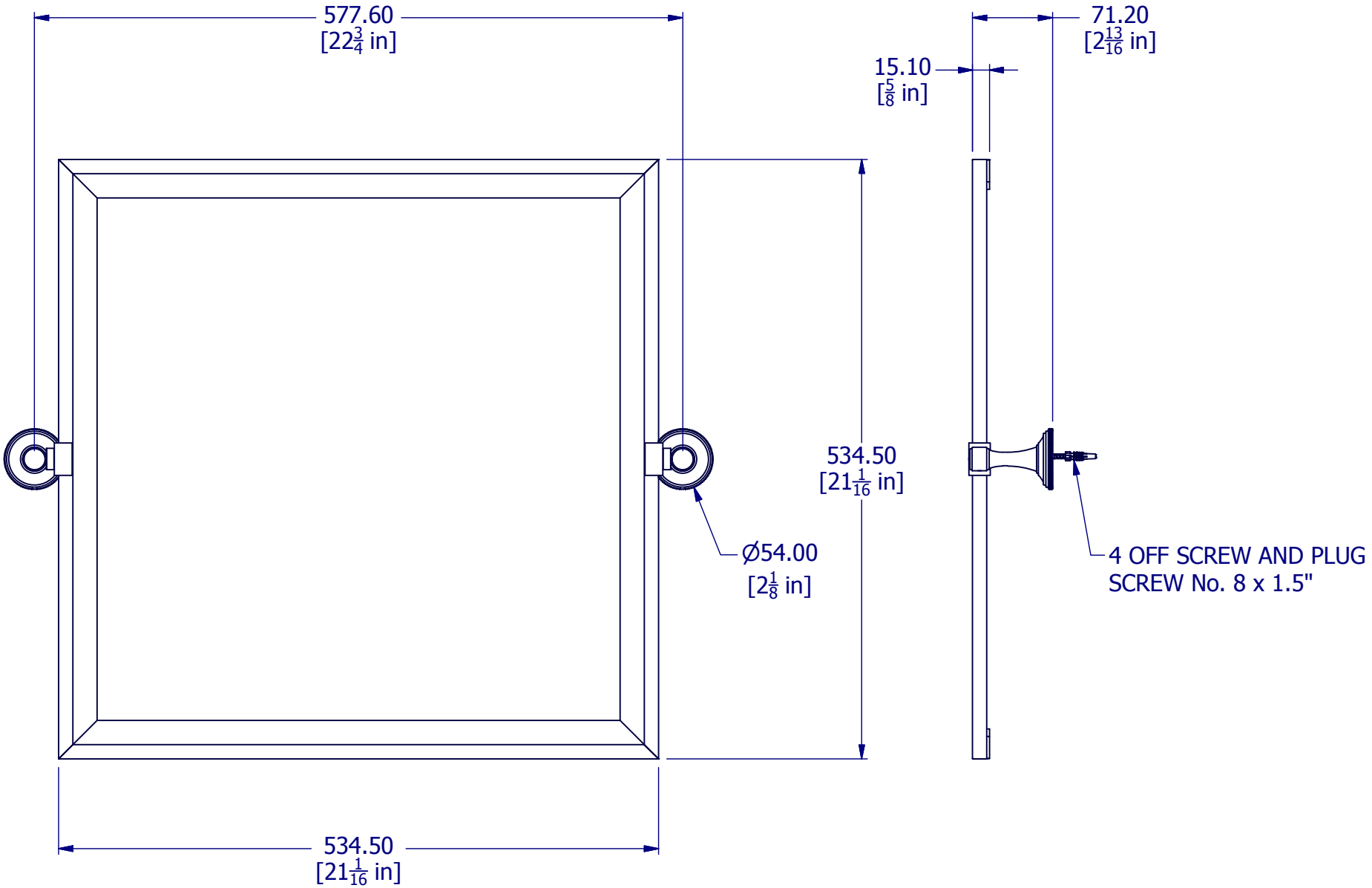

A4	DRG No	L6749	ISSUE NO.	A	ISSUE DATE	11/03/13