SAMUEL HEATH

Product Data Sheet

V1168-1-AIS/ V1168-2-AIS/ V1168-3-AIS

Concealed ½” Thermostatic Rough

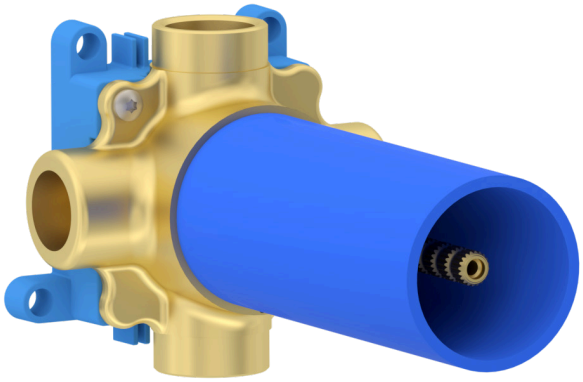

V1168-1-AIS: Concealed Flow control

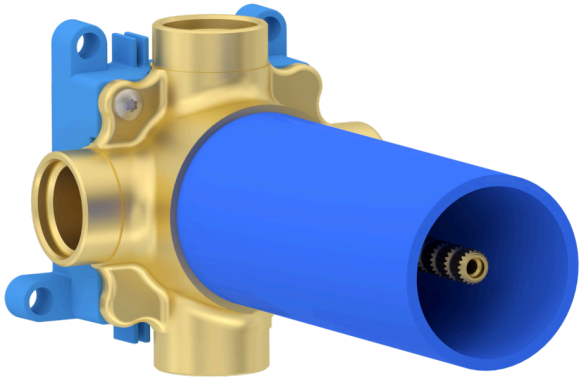

V1168-2-AIS: Concealed 2-way divertor

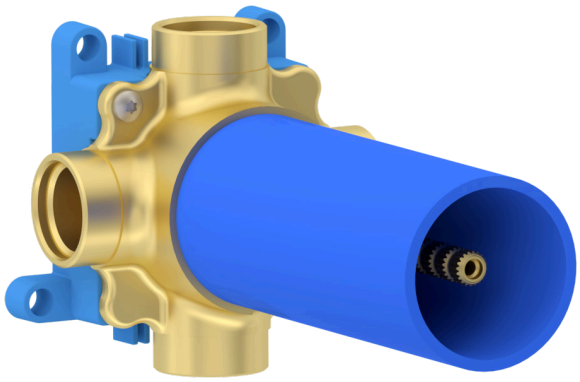

V1168-3-AIS: Concealed 3-way divertor

Pre-Installation Notes

Refer to fitting depths prior to installation.

Ensure the ‘Essential Information’ section on the following page is read before installation.

Essential Information

To ensure this valve rough is installed correctly, these guidelines must be read, understood and followed in full.

These guidelines must be handed to the owner / user for future reference.

Installation must be carried out by a professional licensed contractor.

Both the valve rough and its corresponding trim must be available on-site prior to installation so that the installer can correctly plan the installation.

WARNING: The installation depth of the valve rough is measured from the back of the rough to the surface of the finished wall.

Check that all the parts required for proper installation are present.

Make sure your installation meets all federal, state and local codes. In the state of Massachusetts, all installations must comply with the rules and regulations set forth within 248 CMR.

Supply fittings are designed in accordance with pressure and temperature ratings specified in ASME A112.18.1/CSA B125.1.

If this valve rough is not used for a period of over 2 months, then the water supply should be shut off (using separately installed shut off valves) and a flow control should be opened to allow the water in the valve rough to evaporate, in order that the cartridge is not exposed to stagnant water which can cause damage to the cartridge.

The valve rough must be protected at all times from frost as this can cause cracks in the components, leading to water leakage.

Spare parts information is included within these guidelines.

Dimensions
V1168-1-AIS

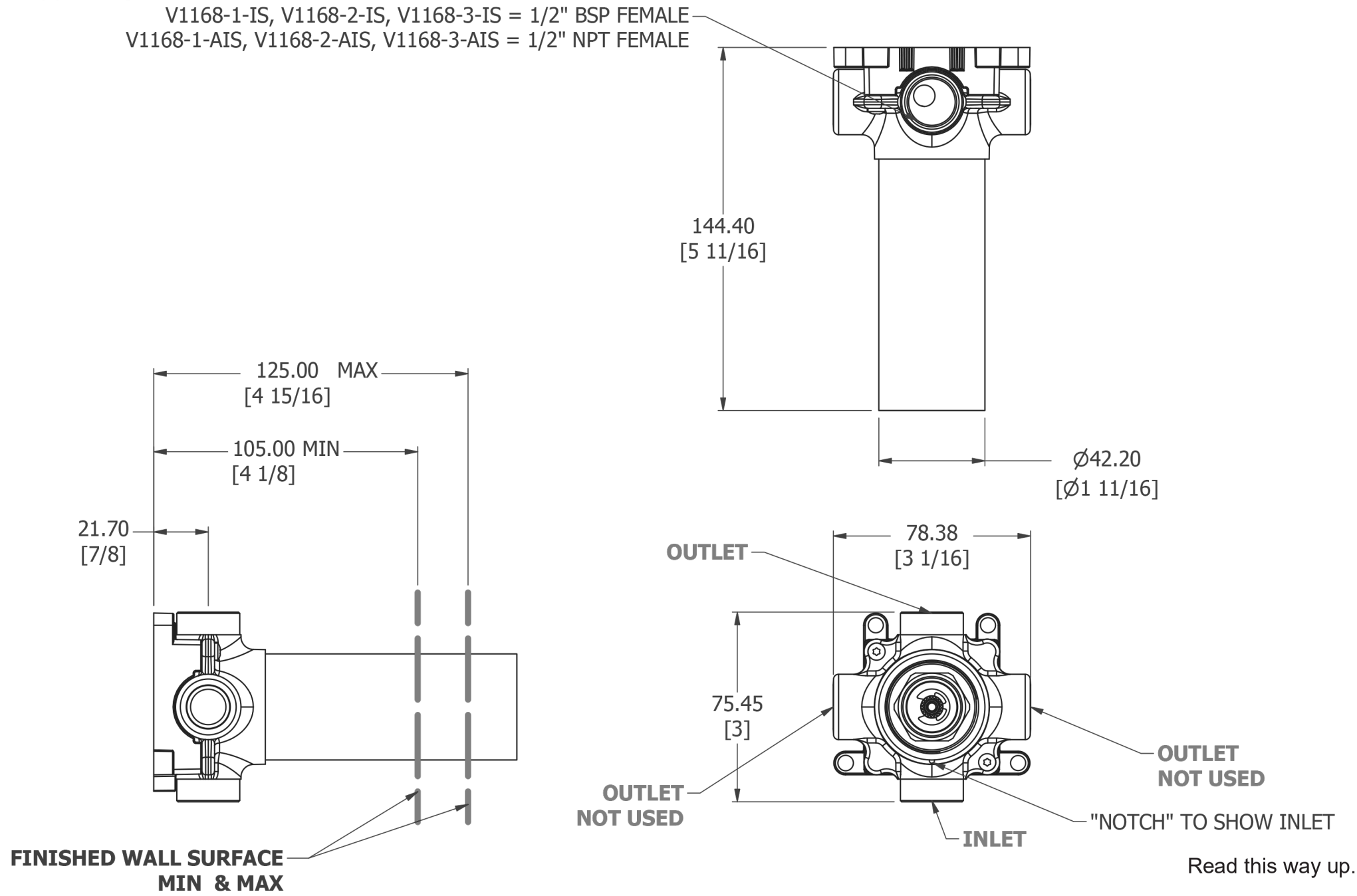

Dimensions
V1168-2-AIS

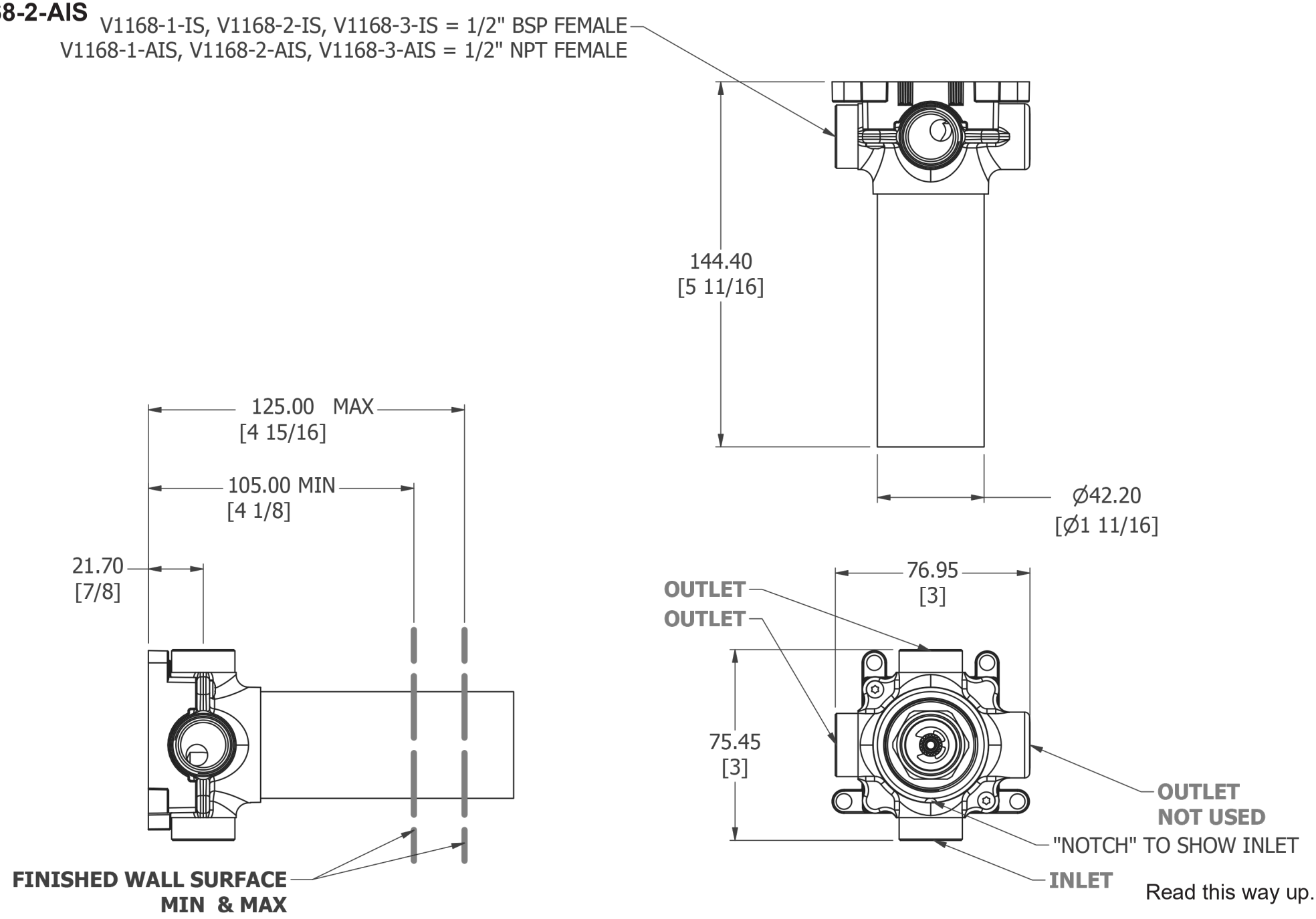

Dimensions
V1168-3-AIS

V1168-1-IS, V1168-2-IS, V1168-3-IS = 1/2" BSP FEMALE
V1168-1-AIS, V1168-2-AIS, V1168-3-AIS = 1/2" NPT FEMALE

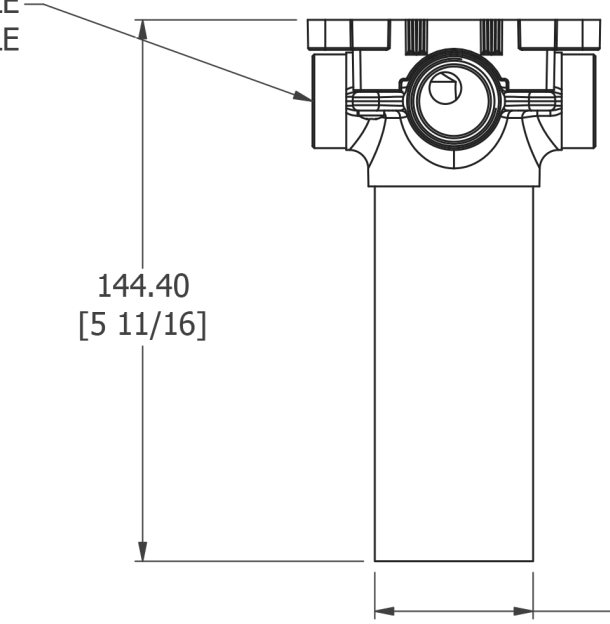

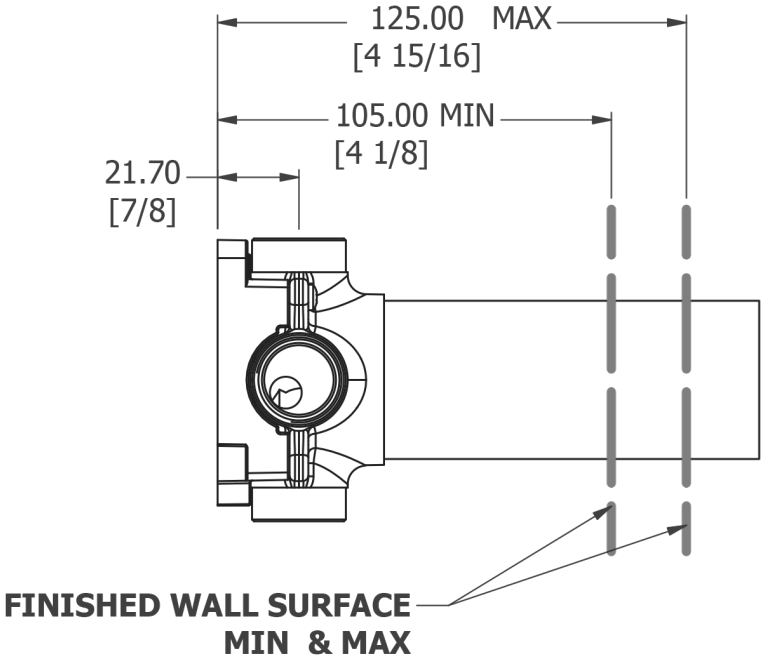

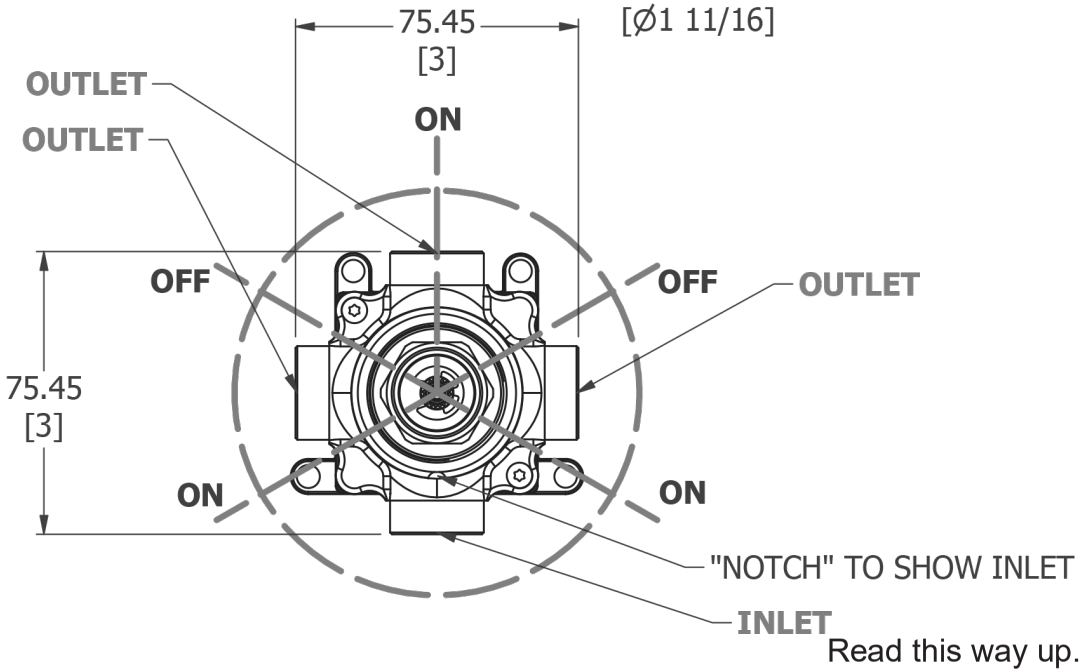

Spares Information

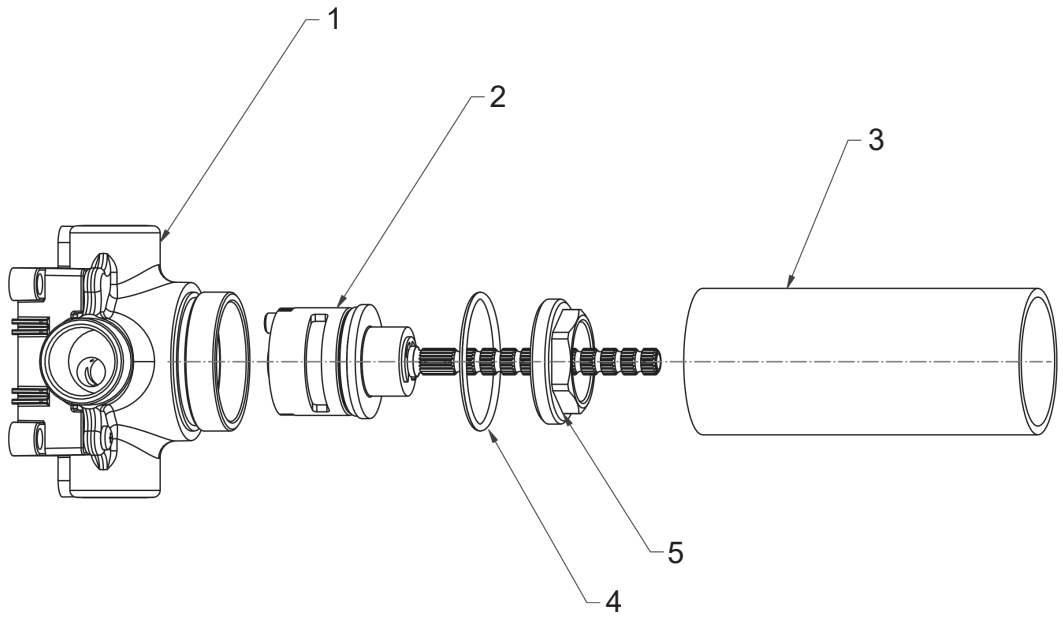

Item	Part No.	Description
1	-	Installation body
2	VS50814-1 Flow Control	Ceramic Disk Cartridge
	VS50814-2 2 Way Diverter	
	VS50814-3 3 Way Diverter	
3	-	Mud Guard
4	-	O-Ring
5	-	Locking Nut

Flow Rates

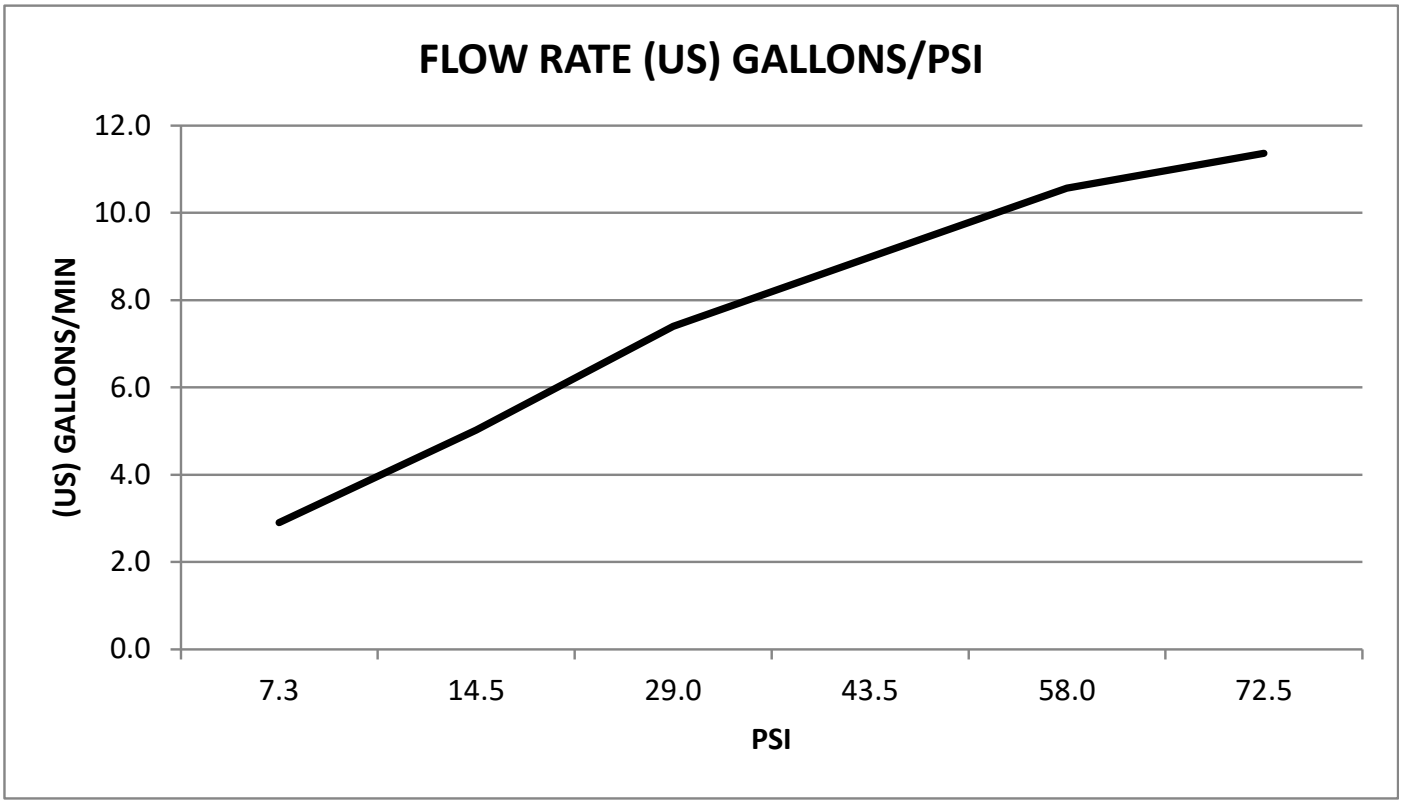

PSI	7.3	14.5	29.0	43.5	58.0	72.5
Gallons P/M	2.9	5.0	7.4	9.0	10.6	11.4

The flow rate data provided in this document is indicative of each product and is given in an open outlet condition. Installation design, external connections and fittings not supplied by Samuel Heath may affect the data provided.

Water Pressure:
Ensure the incoming water pressure is adequate for the desired flow rate.

Flow Rates:
This flow rate data is given with shower valve outlets in an open condition with no shower heads or other ancillaries fitted. Check the flow rate of the intended outlet fittings (heads, hand showers, body jets, etc.) to ensure satisfactory flow.

The design of the installation, external connections, pipe length and other such influences will also affect the given flow rate.

Installation

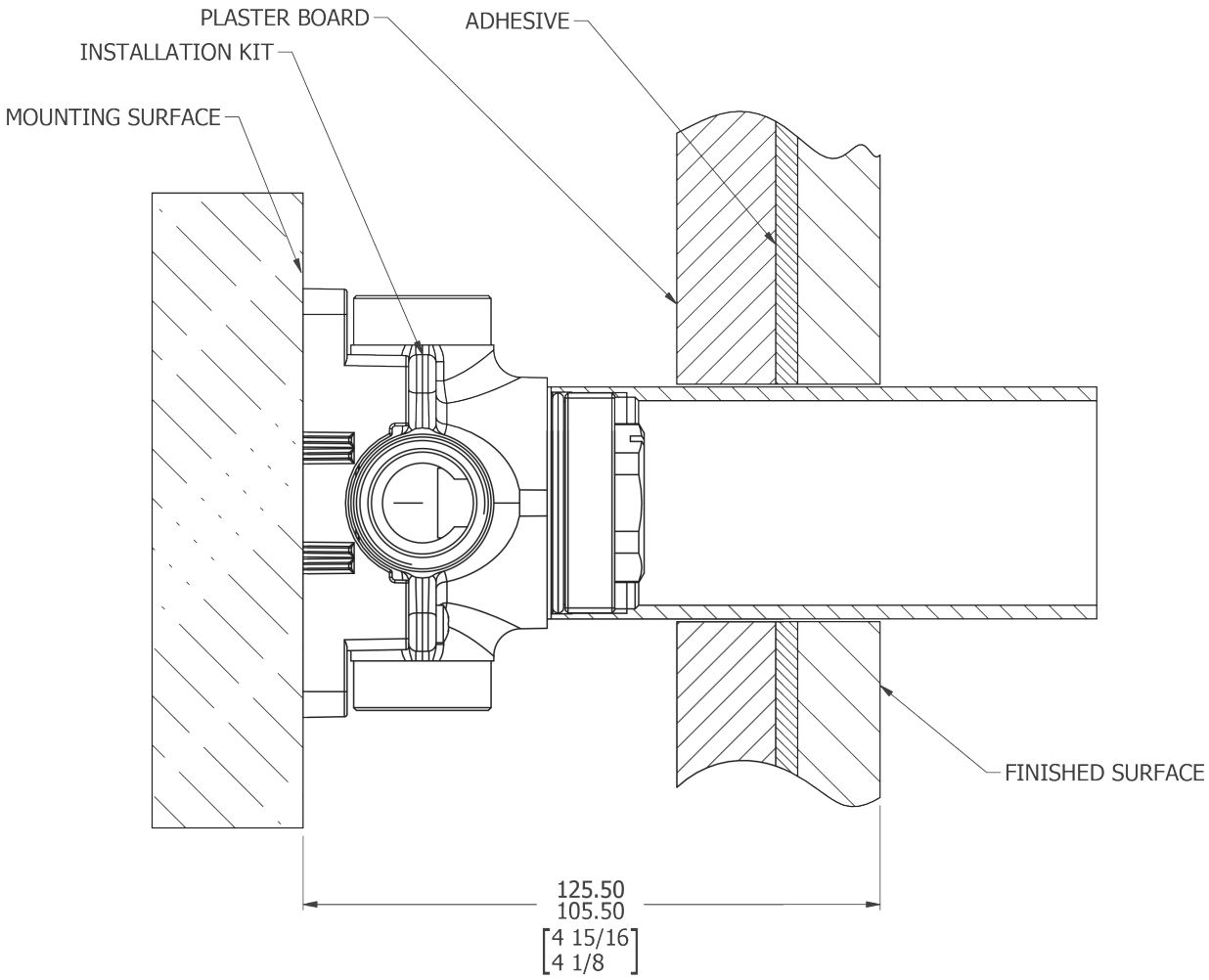

Installation

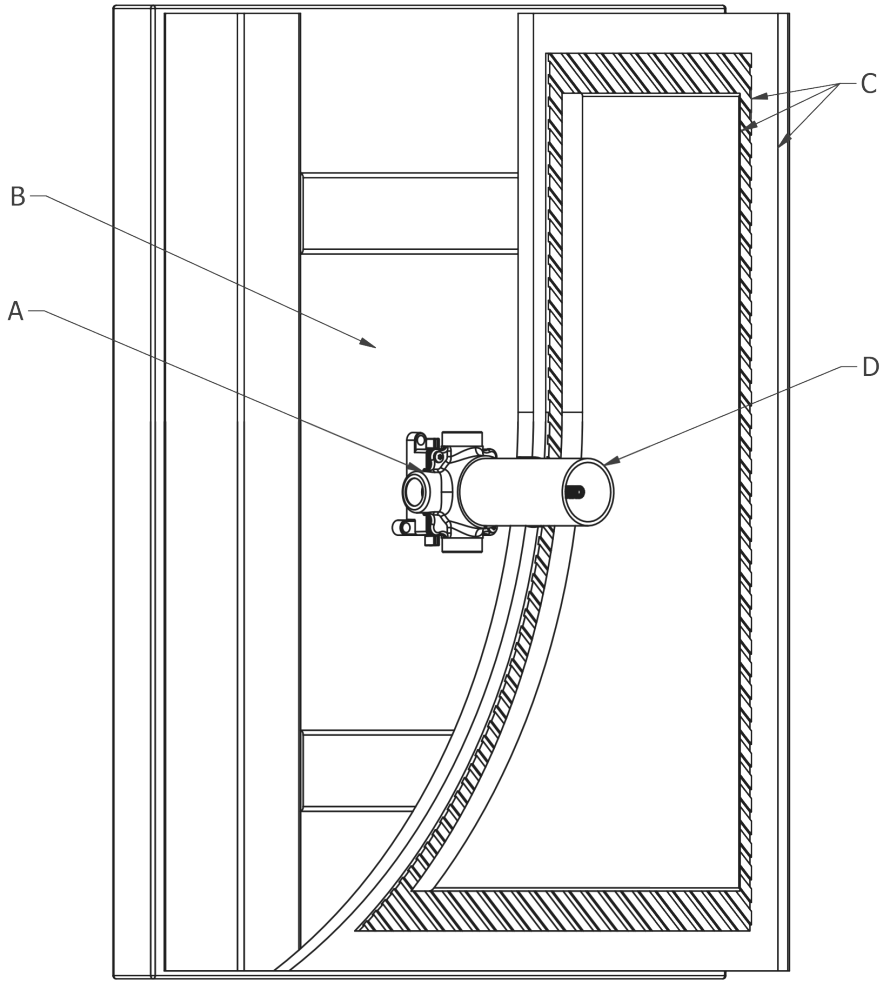

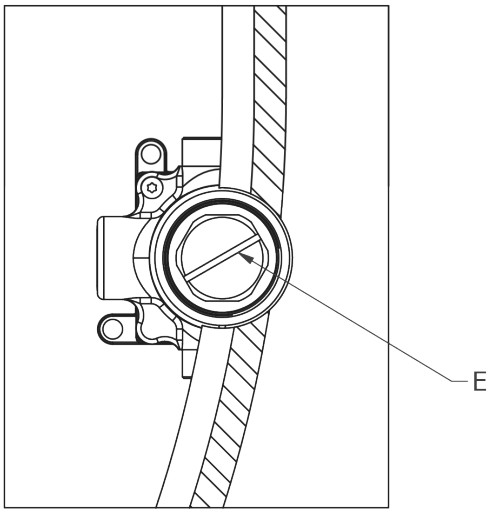

Installation:

1. The valve is supplied with blanking plugs fitted to the inlets and outlets in order to help prevent debris entering the valve whilst offering the valve up for correct location measurement.

2. When you are ready to connect the valve to the pipework, remove blanking plugs from inlets and outlets, do not remove the volume control blanking plugs (E), this must remain fitted.

3. At no point should direct heat be applied to the valve. Any connections that require soldering should be pre-soldered to avoid heat damage to the valve or its components.

4. The valve must be secured to a suitable area using screws (not provided) through the fixing slots in the valve body (A). Ensure that all pipework is thoroughly secured using clips or brackets.

5. It is important to flush the system before installing the volume control cartridge.

6. Ensure that the volume control blanking plugs (E) have not been loosened. Flush the system for no more than 3 minutes at one time with water pressure below 72.5 psi / 5 Bar to remove remaining debris from the supply pipework. Failure to do so adequately will damage the valve and will result in the warranty being void. Ensure that water from the flushed system drains away safely.

7. Install the finished surface (C) in accordance with the depth dimensions shown in this booklet.

8. Trim the mud guard (D) flush with the finished surface (C), and apply a suitable silicon sealant around the joint.

IMPORTANT NOTES

1. Installation should be carried out by a competent engineer, in accordance with water regulations.
2. Before installation ensure supply pipes are flushed clean as debris or loose particles will affect the effiency of the ceramic disc cartridge.
3. For mixer taps it is recommended that hot & cold pressures are equally balanced.
4. To help maintain the high quality finish please clean with a soft damp cloth. Do not use abrasive polish or cleaners. Stains may be removed using diluted washing up liquid.
5. Ceramic cartridges in hard water areas. To prolong the lifespan and reduce servicing periods of your Samuel Heath tap we recommend that a suitable water softener be fitted. Consult your installer/designer for details.
6. Please note that as with all tap and shower ware it will be necessary from time to time for the products to be serviced, this should be carried out by a qualified Plumbing Engineer.

NOTES IMPORTANTES

1. L'installation doit être faite par un ingénieur qualifié, selon les réglements du Service Eau.
2. Avant l'installation, il faut s'assurer que les tuyaux d'approvisionnement sont complètement purgés. Les déchets flottants auront un effet détrimentaire sur l'efficacité de la cartouche céramique.
3. Il est recommandé que les pressions de l'eau chaude et eau froide des mitigeurs et mélangeurs soient maintenues à un niveau égal.
4. Pour conserver la finition de haute qualité, nettoyer avec un chiffon doux et humide. N'employer jamais de la cire et des produits abrasifs. Les tâches peuvent être enlevées à l'aide de liquide vaisselle pur.
5. Cartouches en céramique dans les régions à eau calcaire. Pour prolonger la durée et réduire l'entretien de votre robinetterie Samuel Heath, nous recommandons d'utiliser un adoucisseur d'eau convenable. Veuillez consulter votre installateur/fournisseur pour plus de renseignements.
6. Veuillez noter qu'un entretien sera nécessaire de temps en temps et doit être effectué par un installateur qualifié.

WICHTIGE HINWEISE

1. Installation sollte durch einen kompetenten Fachmann und nach den üblichen Vorschriften ausgeführt werden.
2. Vor Installation Wasserleitung gründlich durchspülen. Verschmutzung wird die Funktion der Kartusche erheblich einschränken.
3. Für Mischbatterien ist es wichtig, daß Wasser mit gleichem Druck eingefuhrt wird.
4. Um den optimalen Zustand dieses Produktes zu erhalten, wischen Sie es bitte nur mit einem feuchten, weichen Lappen ab. Auf keinen Fall Scheuermittel verwenden. Flecken lassen sich mit unverdünntem Geschirrspülmittel entfernen.
5. Keramikkartuschen in Hartwasserbereichen. Um die Lebensdauer zu verlängern und Wartungszeiten zu reduzieren empfiehlt Samuel Heath den Einsatz eines geeigneten Wasserenthärters. Fragen Sie Ihren Installateur/Designer um Rat.
6. Bitte merken Sie, dass alle Armaturen ab und zu eine Wartung brauchen. Diese soll durch einen kompetenten Installateur ausgeführt werden.

ATENCION

1. La instalación se debe realizar por un fontanero.
2. Antes de la instalación, deben pulgar las tuberias dejándo correr el agua por las tuberias para que arrastren los residuos de montaje/obra, con el motivo de que no afecte la eficacia del cartucho de ceramica.
3. Para grupo baño/ducha se recomienda que las presiones del agua caliente y frio sean equilibradas.
4. Para ayudar a mantener el acabado de este producto, limpiar con un paño húmedo suave. No se debe emplear productos abrasivos de baño. Las manchas se pueden quitar empleándo liquido lava-vajillas puro.
5. Cartuchos cerámicos en áreas de aguas duras . Para prolongar su vida útil y reducir los periodos de reparación de su grifo SamuelHeath recomendamos la instalación de un descalcificador de agua. Consulte a su instalador para más detalles.
6. Igual que con todo tipo de griferia y duchas, de vez en cuando será necesario llevar a cabo una revisión al producto; esto deberia ser realizado por un fontanero calificado.

ATTENZIONE

1. L'impianto deve essere montato da personale tecnico in conformità alle vigenti leggi.
2. Prima dell'installazione assicurarsi che le tubature dell' aqua siano pulite. Detriti o residui di lavorazione compromettono l'efficenza del cartuccio.
3. Per i gruppi, si raccomanda che le pressioni acqua calda e acqua fredda siano ugualmente bilanciate.
4. Per mantenere la finizione di ottima qualità, pulire con un panno soffice e inumidito. Non usare creme lucidanti e materiali abrasivi. Le macchie potranno essere tolte usando del detersivo per piatti puro.
5. Come con tutti i tipi di rubinetti e docce, di volta in volta è necessario effettuare una revisione al prodotto; questo dovrebbe essere fatto da un idraulico qualificato.

SAMUEL HEATH
Head Office and Customer Service
Leopold Street
Birmingham
England
B12 0UJ

T: +44 (0)121 766 4200

Info@samuel-heath.com
www.samuel-heath.co.uk

US Customer Service
usa@samuel-heath.com
www.samuel-heath.com

8-40788-A
Issue: B